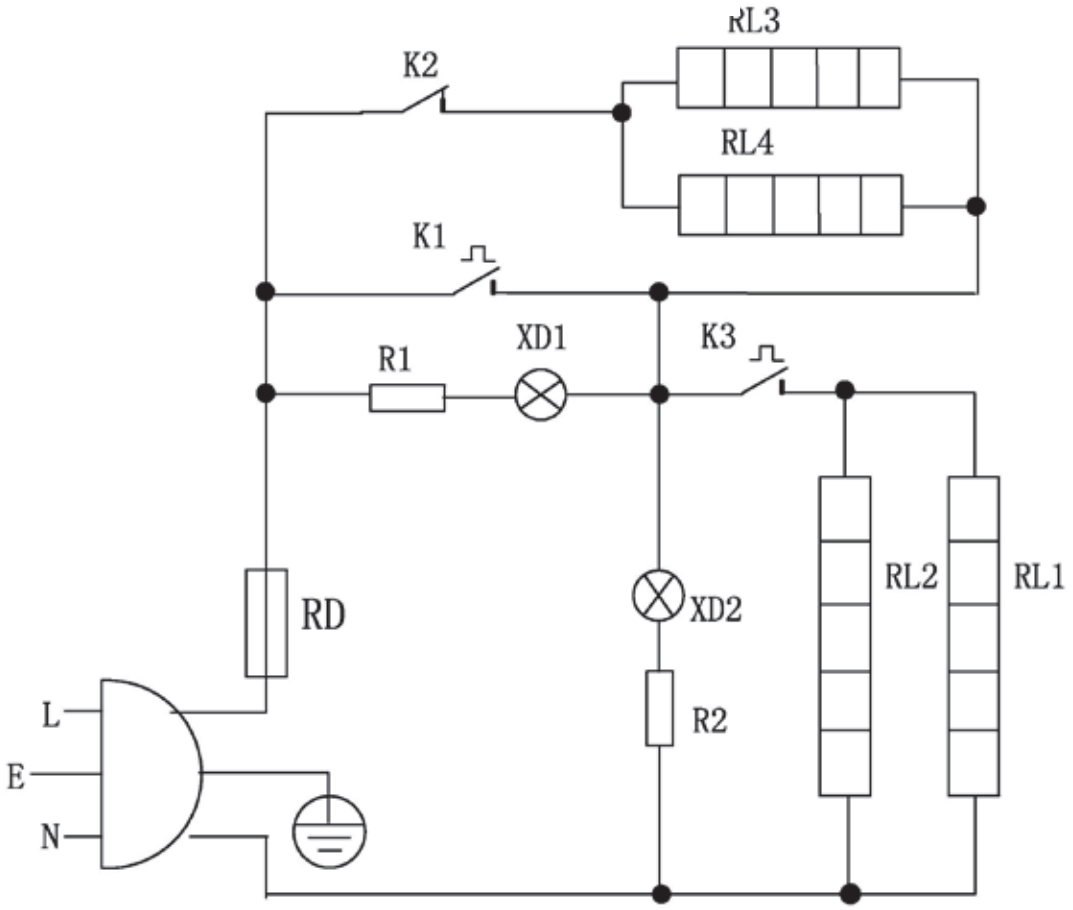

1、K1 -Power Switch
2、K2 -attemperator
3、K3 -temperature limit controller
4、RL1,RL2 -Electrical Warming
5、RL3,RL4 -Hot plate
6、R1、R2、-Resistance
7、XD1-Keep warming Indicator
8、XD2-Heating Indicator
9、RD -thermal cut-off

				Automatic Eiectronic Rice cooker		Weight	Quantity
Mark	Number	Sign the word	Date				1
Design				Electricity principle diagram		Version time	Ratio example
Drawing						A1	
Aadit				CFXB-180B-C/A2/A3	ZHAOQING GOLD ARTEX ELECTRICAL APPLIANCE CO.,LTD.		
Author ited							