HOOD DISHWASHER
WD-6S & WD-7S & WD-8S

ESP1.5-*touch*

(original documentation)

⚠ Read the manual before using the machine!

Installation and user manual

S/N: (En) Valid from: 202610 Rev.: 1

1. General instructions 1
1.1 Symbols used 2
1.2 Machine rating 3
1.3 Checking that the machine and manual correspond 3
1.4 EU Declaration of Conformity 4

2. Safety instructions 5
2.1 General information 5
2.2 Transport 6
2.3 Installation 6
2.4 Detergent and drying agent 6
2.5 Operation 7
2.5.1 Personal equipment and clothing 7
2.5.2 High temperatures 7
2.5.3 Risk of crushing 7
2.5.4 Risk of slipping 7
2.5.5 Sounds 7
2.6 Cleaning the machine 7

3. Installation instructions 8
3.1 General information 8
3.1.1 Rust on industrial dishwashers 9
3.2 Requirements for the installation site 10
3.2.1 Lighting 10
3.2.2 Ventilation and ambient temperature 10
3.2.3 Power supply 10
3.2.4 Water 10
3.2.5 Drain/waste pipe 10
3.2.6 Space for servicing 10
3.3 Transport and storage 11
3.3.1 Unpacking 11
3.4 Installation 12
3.4.1 Preparing for the installation 12
3.4.2 Positioning the machine 12

3.5 Connections 13
3.5.1 Electrical connection 14
3.5.2 Water connection, regardless of any options 14
3.5.3 Drain/waste pipe 15
3.5.4 Ventilation 15
3.5.5 Bleeding the hood lifting cylinder (option) 16
3.5.6 Detergent and drying agent (option) 16
3.5.7 Adjustment of hinged basket conveyor 21
3.5.8 Condensation unit with heat recovery through the heat recovery unit (option) 22
3.5.9 Steam hood with extractor (option) 24
3.5.10 Heat exchanger, heat recovery through the wastewater (WD-6S & WD-7S) (option) 25
3.6 Installation and connection of auxiliary equipment and options 26
3.6.1 ECO flow (condensing unit) 26
3.6.2 Drain pump 26
3.6.3 Marine design 26
3.6.4 Adaptation for WD-PRM6 S/WD-PRM7 S 26
3.6.5 Automatic start 26
3.6.6 WD-RO150 26
3.6.7 Sinks, conveyors and roller conveyors 27
3.7 Trial operation 30
3.7.1 Start-up schedule 30
3.8 Documentation 31

4. Operating instructions 32

4.1 Before washing 33
4.1.1 Machine design 33
4.1.2 Preparations before filling 35
4.1.3 Filling and heating the machine 40
4.2 Washing 42
4.2.1 Positioning of dishware in baskets 42
4.2.2 Selection of Normal load (-) / Heavily soiled load (+) (WD-7S & WD-8S) and programme 45
4.2.3 Washing 48
4.2.4 Interrupting a current wash programme 52
4.2.5 Display when wash is complete 52
4.2.6 Checking the wash result 53
4.2.7 Changing the water 54
4.3 After use – Cleaning – etc. 55
4.3.1 Incorrect cleaning methods 55
4.3.2 The machine is shut down 56
4.3.3 Daily cleaning 64
4.3.4 Cleaning each week or as required 65
4.3.5 Operating problems 66

5. Technical specifications 72

1. General instructions

Read the instructions in this manual carefully as they contain important information regarding the correct, effective and safe installation, use and servicing of the machine. Service personnel should have access to all documentation for the machine.

Keep this manual in a safe place so that it can and should be used by other operators of the machine.

- The machine is intended to be used for washing dishware that is found in the general catering and restaurant trade. Other uses are NOT recommended!
- The machine can be equipped with a number of different options. Certain options may be standard in a number of countries. Check what your machine is equipped with.
- Use auxiliary equipment where possible to avoid heavy lifting.
- The machine's display indicates what the machine is doing. The machine's various temperatures and any alarms are also shown.
- The capacity requirements of the machine can be found in the TECHNICAL DATA chapter.
- The electronics in the machine are RoHS compatible.

Before the machine is started up and used, the following points should be observed:

- The SAFETY INSTRUCTIONS chapter must be studied carefully before commissioning the machine.
- Installation of the machine must be performed in accordance with the requirements and instructions indicated in the INSTALLATION INSTRUCTIONS and TECHNICAL SPECIFICATIONS chapters.
- Any personnel who may at some point use the machine must be trained in its operation, use and care.
- The machine should not be used by anyone suffering from a physical or mental illness.
- A close eye should be kept on any children in the vicinity of the machine to ensure they do not tamper with it.
- All cover plates must be fitted during use.

The machine and equipment requires an annual service. Contact one of our authorised and trained service companies for such a service.

1.1 Symbols used

This symbol warns of situations where a safety risk may arise. The instructions given should be followed in order to prevent injury and dangerous situations.

This symbol on a machine part warns of electrical equipment. The machine must be entirely non-live during servicing, turn off the power at the power switch and if required, the switch should be locked to prevent unintentional operation. The component may only be removed by a qualified electrician. You must also remember to switch off the power supply to any external equipment which has a separate supply (e.g. detergent equipment).

This symbol warns that the machine's electronics are sensitive to electrostatic discharge (ESD), which is why a static electricity wristband must be used when handling the electronics at all times.

This symbol explains the right way to perform a task in order to prevent poor results and/or damage to the machine.

This symbol identifies recommendations and hints to help you get the best results when washing, to increase the machine's lifespan and reduce the risk of emergency shutdown.

This symbol explains the importance of careful and regular cleaning of the machine to meet hygiene requirements.

This symbol warns of the importance to read the manual before using the machine.

This symbol warns that local regulations must be followed for recycling of packaging etc. as well as the destruction of the machine.

This symbol shows where any earth cable for potential equalisation can be connected. The earth bolt is placed on the machine's stand.

1.2 Machine rating

The machine has two rating plates, one of which is placed at the bottom of one side of the machine and the other in the electrical cabinet. The technical information on the plates is also included on the machine's wiring diagram. The various rating fields show:

1. Machine type
2. Machine serial number
3. Year of manufacture
4. Enclosure protection class
5. Voltage
6. Number of phases with or without neutral
7. Frequency
8. Main fuse
9. Motor output
10. Electrical heating output
11. Max. output
12. QR code

1.3 Checking that the machine and manual correspond

Check that the type description on the rating plate corresponds with the type description on manual cover page. If manuals are missing, it is possible to order new ones from the manufacturer or the local distributor. When ordering new manuals, it is important to quote the machine number found on the rating plate.

1.4 EU Declaration of Conformity

A so-called EU Declaration of Conformity is provided on delivery of the machine.

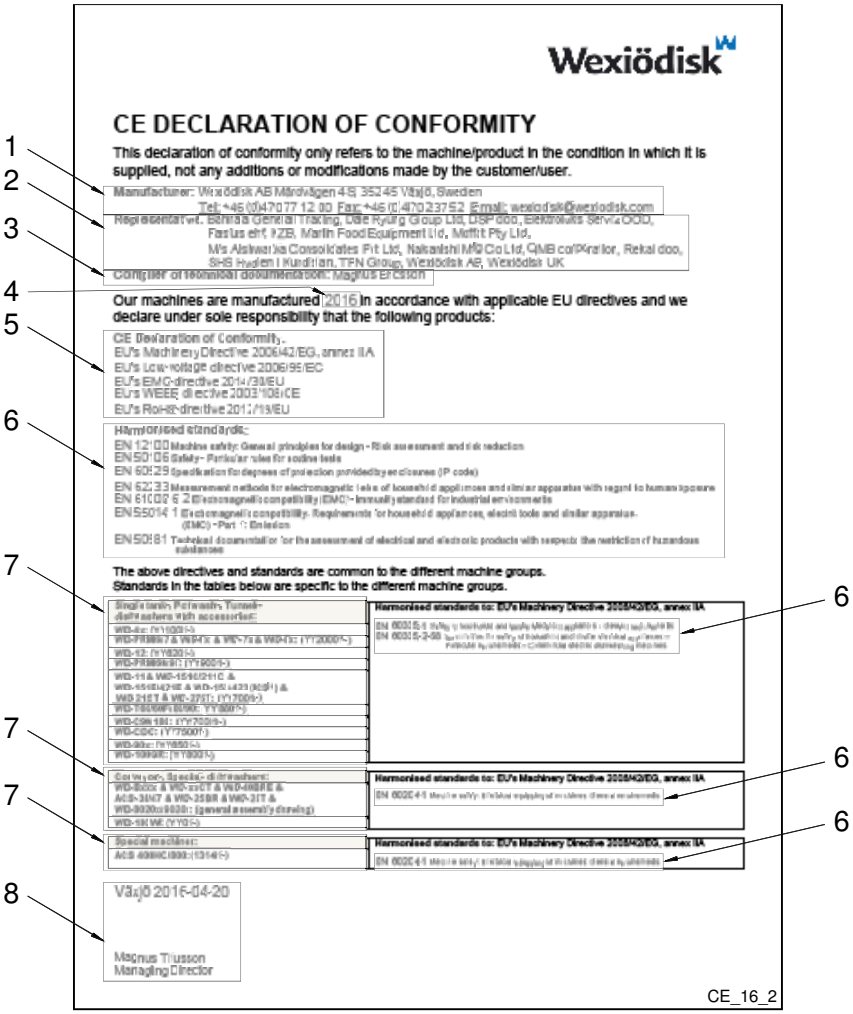

1. Contact details of the manufacturer (Wexiödisk AB, Mårdvägen 4, SE-35245 Växjö, SWEDEN, Tel.: +46 470 771200, E-mail: wexiodisk@wexiodisk.com).
2. Representatives of Wexiödisk AB.
3. Person responsible for the product's documentation.
4. Year of manufacture of the product.
5. The EU Directives with applicable provisions to which all the machines, special machines and accessories comply.
6. Harmonised standards for the Directives specified, and which the machines, special machines and accessories meet, wherever relevant.
7. Model designation and serial number of the machines, special machines and accessories the document applies to.
8. Place and date with signature and name (in block letters) of the person responsible for ensuring compliance with legislation and regulations.

2. Safety instructions

Read the chapter GENERAL INSTRUCTIONS carefully before starting work.

2.1 General information

The machine is CE marked, which means that it complies with the requirements of the EU Machinery Directive with regard to product safety. Product safety means that the design of the machine will prevent personal injury or damage to property. The CE mark is only valid for an unmodified machine. Any damage to the machine arising from failure to follow the instructions will invalidate the supplier's warranty and product liability.

Installation, repairs and servicing must be performed by an authorised engineer in accordance with local and national rules in effect for such work with water and drainage systems, electricity, ventilation and steam. To ensure electrical safety, components must only be tested when installed in their normal place in the machine. We recommend that the work is performed by the manufacturer or one of the manufacturer's authorised service companies.

To further improve safety during installation, operation and servicing, the operator and the personnel responsible for installing and servicing the machine should read the safety instructions carefully.

The machine's electronics are sensitive to electrostatic discharge (ESD), which is why a static electricity wristband must be used when handling the electronics at all times.

Before the machine enters service, ensure that the personnel are given the necessary training in handling and looking after the machine.

In order to avoid dangerous situations, the following must be followed:

- Switch off the machine immediately in the event of failure or malfunction.
- If the power cable is damaged, it must be replaced immediately with an equivalent type in accordance with the relevant specifications. The work must be performed by an authorised person. Make sure the machine is non-live before removing the cover plate. Turn off the power using the power switch. If required, the switch must be locked to prevent unintentional operation. You must also remember to switch off the power supply to any external equipment which has a separate supply (e.g. detergent equipment).
- Shut off the tap for incoming water and drain the machine's tank(s) before starting work. Let the machine cool down as pipes for water, washing pumps, booster heaters and valves become very hot when the machine is in operation.
- The machine and equipment requires an annual service. The machine should be serviced by a person authorised or trained to do so by us. Use original spare parts.
- Warranty repairs must be performed by an authorised company. Contact an authorised service company to draw up a programme of preventive care and maintenance. For authorised service companies, please see www.wexiodisk.com or contact Wexiödisk AB.
- The regular checks described in the manual must be carried out in accordance with the instructions.
- As the machine is equipped with an external data outlet (USB), this must NOT be used for anything other than its intended purpose.

2.2 Transport

Handle the machine with care during unloading and transport; there is a risk of it tipping over. Never lift or move the machine without using the wooden packaging to support the stand.

2.3 Installation

- The machine is designed for quick electrical installation.
- The machine must be connected to a lockable power switch.
- Make sure that the mains voltage is the same as that indicated on the machine's rating plate.

For increased safety, it is recommended to equip the installation with a ground fault circuit breaker.

2.4 Detergent and drying agent

Be aware of the risks involved in handling detergents and drying agents. Protective gloves and safety glasses should be used when handling, and an eyebath should be within easy access. Read the warning text on the detergent and drying agent containers as well as the detergent supplier's instructions.

2.5 Operation

Be very careful around the machine when it is in operation.

2.5.1 Personal equipment and clothing

The following precautions are necessary to minimise the risk of body parts or objects being drawn into the machine or the moving parts of associated equipment, which could lead to serious injury.

- Long or dangling hair must be tied up or otherwise secured.
- Loose-fitting clothing, jewellery and other objects which could become caught up in the moving parts of the machine or associated equipment must not be worn when working on or near the machine.

2.5.2 High temperatures

- The temperature of the washing and rinsing water is 60℃ and 85℃. Do not open the machine until the washing and rinsing phases have finished. The steam that comes out of the machine after the wash has been completed is hot.
- Avoid touching hot pipes and booster heaters. The machine's outer jacket can also become hot during operation.

2.5.3 Risk of crushing

The machine, and any equipment, has moving parts before, during and after washing. Be careful therefore to avoid crush injuries. In connection with service or repairs that require the hood to be open, it must be secured by means of a prop for example.

2.5.4 Risk of slipping

The floor should be kept clean and dry to eliminate any risk of slipping. Mop up any water and leftover food that has been spilt.

2.5.5 Sounds

The machine is not silent during operation, see TECHNICAL SPECIFICATIONS. Hearing protection may therefore need to be used.

2.6 Cleaning the machine

The water in the tank has a temperature of approximately 60℃ and contains detergent. Be careful when draining and cleaning the wash tank. Wear protective gloves and safety glasses and have an eyebath within easy access.

3. Installation instructions

Read the chapters GENERAL INSTRUCTIONS and SAFETY INSTRUCTIONS carefully before starting work.

3.1 General information

Read these instructions carefully, as they contain important information regarding the correct installation method.

- The instructions should be used together with the machine's wiring diagram located in the plastic folder behind the front panel of the machine.
- The machine can be equipped with a number of different options. Certain options may be standard in a number of countries. Check what your machine is equipped with.
- If holes need to be drilled in the machine, the holes must be fitted with an edge strip or similar protection.

3.1.1 Rust on industrial dishwashers

- Large-scale industrial dishwashers in general as well as our dishwashers are made of stainless materials, but despite this, there are still situations where rust can occur on “stainless” materials.
- We are going to describe a few reasons for this here, so that you, as a user, service engineer or other type of personnel, can avoid this.
- Rust usually occurs due to the fact that something that is not stainless finds its way onto the stainless surface. The non-stainless particles will soon start to rust, and then contaminate the stainless material, which also starts to rust. If no action is taken at this point, serious damage such as a hole in the material can occur.

RISK SITUATION	CAUSE	DECLARATION / ACTION
Drilling holes when installing a detergent device.	Using a drill or hole saw that has previously been used for ordinary non-stainless materials.	“Contaminated” hole-drilling tools can cause enormous damage in the form of pores in stainless plates. Never use a cutting tool that has previously been used on other materials or blackplate.
	Using blunt tools when drilling holes.	Stainless plate, which has overheated during hole drilling, may lose its “stainless” properties. This can show up as rust around the hole for the detergent cell.
	Shavings from hole drilling.	The shavings from drilling or hole sawing are usually heated so much that they lose their stainless properties. They must always be removed by hand! Washing after hole drilling is not enough!
Rust spots that occur during normal operation and use.	Minerals, e.g. ferrous gravel or earth, from dishware or food (vegetables and root vegetables) that has been lying in crates, find their way onto the stainless surface. Minerals (gravel) can also be found on the wheels of catering trolleys.	Daily cleaning is always important. Use a suitable brush for “mechanical” cleaning, e.g. in the wash tanks, on the wash trays and filters.
	Steel wool. Ordinary steel wool is not stainless, and can cause serious damage to stainless surfaces and plates.	Use stainless cleaning pads. Remove all ordinary steel wool from the catering facility / restaurant.

NOTE! If rust spots have developed, they must be dealt with immediately by a person authorised to do so!

3.2 Requirements for the installation site

3.2.1 Lighting

In order to ensure the best possible working conditions during installation, operation, servicing and maintenance, make sure that the machine is installed in a well-lit room.

3.2.2 Ventilation and ambient temperature

The machine is intended to be used in an indoor environment at normal room temperature. The machine produces heat and steam when in operation. In order to ensure the best possible working conditions, a certain air renewal rate is required in the dishwashing room. The ventilation requirements for the dishwashing room are to be dimensioned on the basis of the applicable standards.

The machine may optionally have a steam hood or a heat recovery unit connected to an exhaust fan to reduce the amount of steam released. WD-6S and WD-7S can also be equipped with a heat exchanger.

3.2.3 Power supply

Power supply connections are made by qualified personnel in a way that complies with local and national regulations. The machine's capacity requirements are stipulated in TECHNICAL SPECIFICATIONS.

3.2.4 Water

Water connections are made by qualified personnel in a way that complies with local and national regulations. The machine's capacity requirements are stipulated in TECHNICAL SPECIFICATIONS.

3.2.5 Drain/waste pipe

There must be a waste pipe with an effective trap for the machine's waste water and for water used for rinse cleaning. The machine's capacity requirements for drainage are stipulated in TECHNICAL SPECIFICATIONS.

3.2.6 Space for servicing

A 1-metre area should be left clear in front of the machine for servicing purposes. Depending on if the machine has different accessories, there may also be such a requirement at the infeed and outfeed ends of the machine.

3.3 Transport and storage

Always transport the machine in an upright position.

Take care during transport, as there is a risk of tipping. NOTE! The machine must not be transported without a pallet or other support. Some form of support beam must always be used along the sides of the machine during transport. Otherwise the machine may become damaged. When transporting the machine without a normal wooden pallet, always check that none of the components underneath the machine can be damaged.

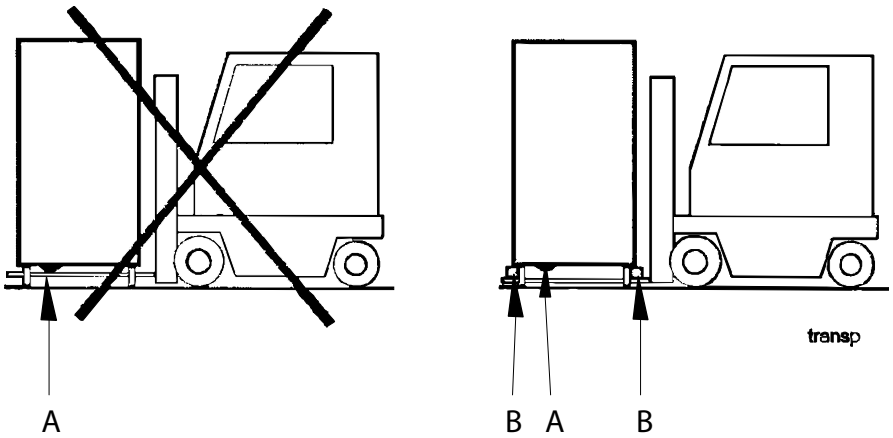

A=Pumps
B=Spacers

If the machine is not being installed immediately, it must be stored in a frost-free area where the air is dry.

3.3.1 Unpacking

Check that all parts have been delivered by comparing them with the delivery note.

Remove the packing material. Inspect the machine for any transport damage.

Recycling

- The machine is manufactured from stainless steel plate, among other things, and also contains electronic components. Recycling of the appliance when its economic lifetime has been reached must be carried out in accordance with current rules and regulations.
- Packaging must be sent for destruction or recycling in accordance with local regulations.

3.4 Installation

3.4.1 Preparing for the installation

Check that there is sufficient room for the machine at the installation location.

- Check that correct connections are available for water, electricity, drainage and possibly steam at the installation location. See TECHNICAL SPECIFICATIONS.
- Check that the overheating protection device is reset.

3.4.2 Positioning the machine

Check the following points before the machine is placed in position:

- Check that the fuse for the machine at the site is off, blocked and that outgoing electrical circuits from the machine are non-live.
- Remove the protective plastic on the sides which are to be stood against a wall.
- The distance between the wall and machine should be at least 20 mm.
- If the machine is to be corner-loaded, it must be positioned with the display furthest away from the wall.

Put the machine in position and check that the machine and any accessories are horizontal using a spirit level. Place the spirit level on the join between the machine tank and the upper part. Adjust the height using the legs.

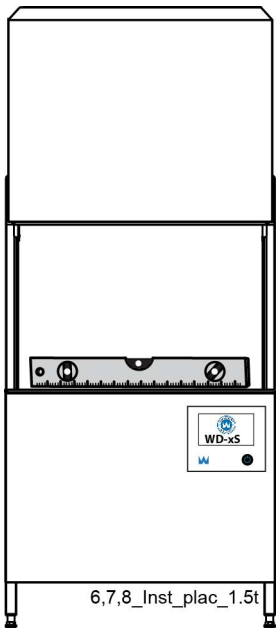

Check with a spirit level that the machine is horizontal

Once the machine has been filled with water, perform another check to make sure the machine is horizontal.

3.5 Connections

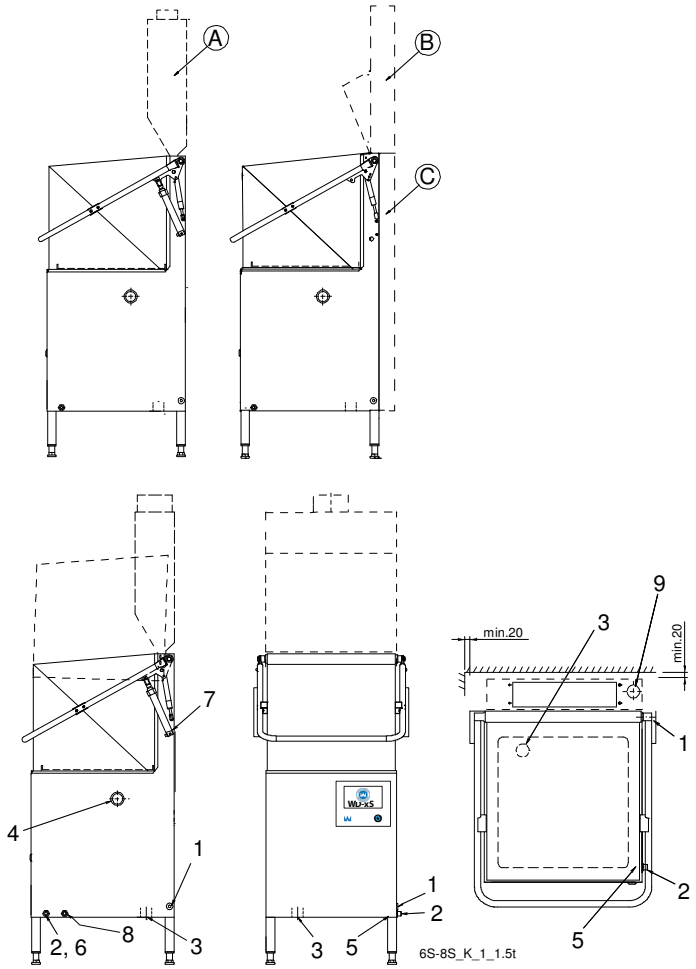

- A= Steam hood with extractor (option)
- B= Condensation unit with heat recovery through the heat recovery unit (option)
- C= Heat exchanger, heat recovery through the wastewater (WD-6S & WD-7S) (option)

1. Electrical connection
2. Water connection
3. Drain/waste pipe connection
4. Plugged hole for detergent hose
5. Water pressure outlet for detergent dosage
6. Alternative water connection from below
7. Bleed for lifting cylinder (on machines with “Automatic hood lift”)
8. Water connection (option)
9. Waste connection (option)

In the following chapter, figures are given in brackets to clarify what needs to be done. These numbers refer to image and list above.

3.5.1 Electrical connection

Information about electrical connections is available on the machine's wiring diagram which is provided on delivery. Store the diagrams in the plastic pocket, located in the electrical cabinet, even after installation.

- The machine is designed for quick electrical installation.
- The machine must be connected to a lockable power switch. This should be placed on a wall, well-protected from water and from the steam which escapes when the machine is opened. The machine is supplied with the electrical cable connected (1).

After completing the installation, switch on the power switch and all circuit breakers.

3.5.2 Water connection, regardless of any options

- A shut-off cock must be installed on the incoming pipe.
- It is important that the water supply has sufficient pressure to ensure the correct flow of water to the machine. The required water flow and pressure can be found in the TECHNICAL SPECIFICATIONS.
- WD-6S & WD-7S: When the machine is equipped with an "Automatic hood lift" and/or a "Condensation unit", it will also be equipped with a "Break tank", which is fitted with a filter and a non-return valve.
- WD-8S: The machine is equipped with a "Break tank", which is fitted with a filter and a non-return valve and can be equipped with an "Automatic hood lift", but NOT an "Automatic hood lift" if the machine's basket conveyor is equipped with a metal shelf.

The water pipe is connected at (2) or, when the machine is equipped with options which require double connections, also at (8).

Machine equipped with a heat recovery unit (option)

If the machine is equipped with ECO flow (option), cold water is connected to (2) and ordinary water filling to (8).

Machine equipped with demineralised water (RO water) (option)

- NOTE! Water is connected to the machine at (8).
- NOTE! Demi water for the final rinse is connected at (2).
- The machine has a 12kW booster heater.

3.5.3 Drain/waste pipe

The waste water system connected to (3) or (9) should consist of a 50mm metal pipe that will withstand mechanical impacts. The waste pipe must run to a floor drain, where its opening must be above the water level.

Ensure that the drain connection is kept in place by using e.g. cable ties in the designated areas.

Machines with a drain pump (option)

NOTE! The drain connection must be connected above the tank's water level in the machine.

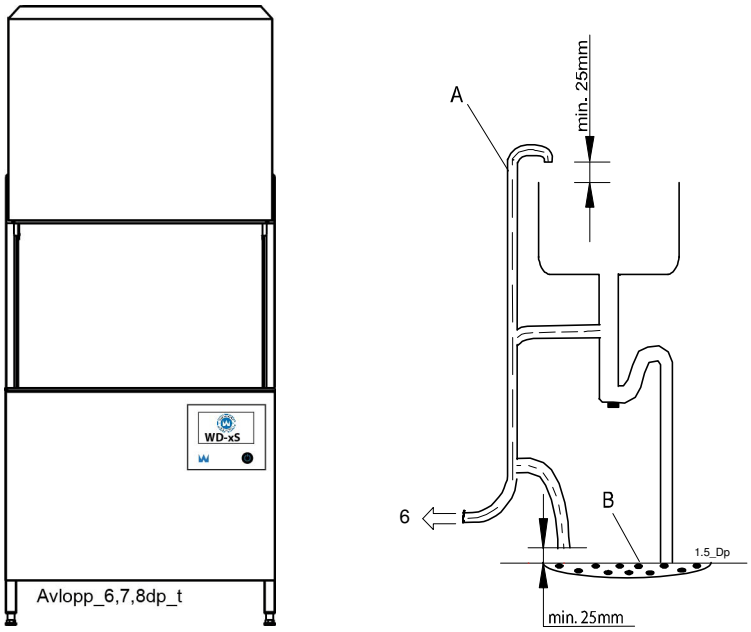

Drain hose (A) consists of a spiral hose which is connected to the machine's drain pump (6) and to the drain (B) as desired.

Machines connected to WD-PRM6 S/WD-PRM7S (option)

See also "Installation and user manual" for WD-PRM6 S/WD-PRM7 S.

3.5.4 Ventilation

The machine's heat load for the room is stipulated in TECHNICAL SPECIFICATIONS.

As an option, the machine can also be equipped with a steam hood with extractor and condensing unit with heat recovery through a heat recovery unit. WD-6S and WD-7S can also be equipped with heat recovery through the wastewater.

3.5.5 Bleeding the hood lifting cylinder (option)

NOTE! Machines with “Automatic hood lift” are also equipped with a break tank.

1. Close the hood.
2. Loosen the hose connection of the first air cylinder approx. 2-3 turns using a 13 mm box wrench.
3. Keep the hood in the closed position. Press the up button. Check that only water and no air comes out of the hose connection. Otherwise repeat the procedure.
4. Tighten the hose connection with the hood still in the lower position.
5. Repeat the same procedure with the second cylinder.

3.5.6 Detergent and drying agent (option)

NOTE! For the potential-free outputs KA9-KA15, the spark-guard sits on the electronic card to protect the relay contactors in case of inductive loads. This spark-guard can generate a small leakage current even if the relay is not activated. If you connect equipment to a high impedance input on any of the contactors J71-J74, this current can affect the operation of the equipment. See also the wiring diagram for the machine.

- Check what your machine is equipped with, which depends on the model, machine type and country. The equipment will be roughly set at the factory if the machine is equipped with any of these alternatives. Contact your chemical supplier for a more precise setting.
- Use the same make and type of detergent and drying agent.
- With machines connected to cold water, the water pipe temperature may be too low for use of powder or paste type detergents.
- If liquid detergent is used together with Wexiödisk’s detergent pump, the detergent must be placed under the machine’s tank level.
- The positioning of the drying agent is not as critical, but it should be placed in the same way as the detergent.

If equipment for a different type of detergent is used, it should preferably be put on the wall behind the machine to avoid holes being drilled unnecessarily in the machine.

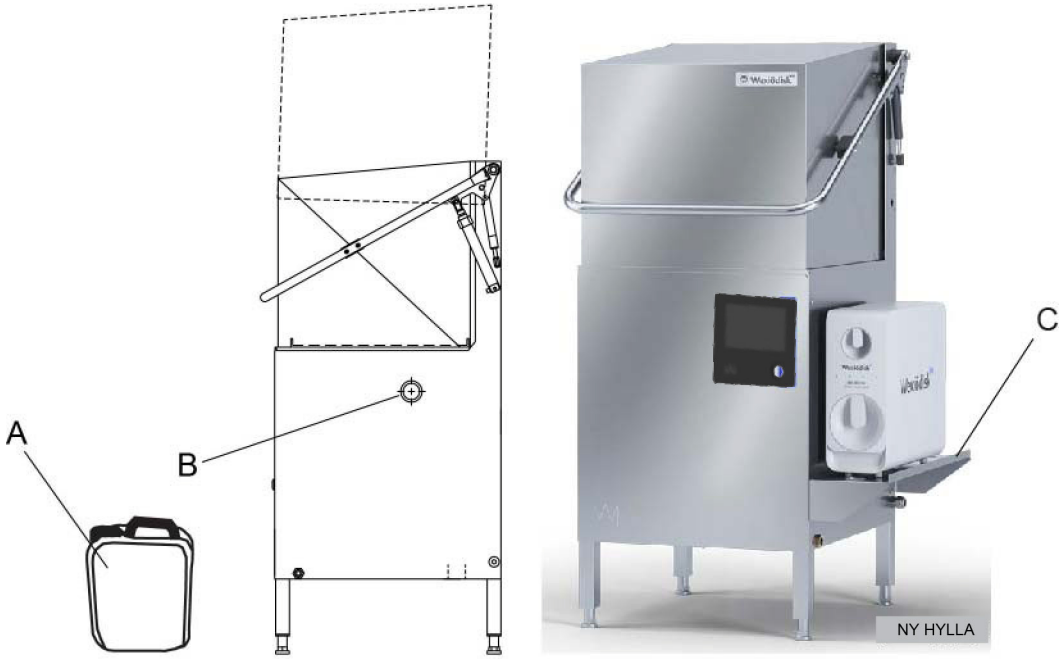

The detergent (A) is positioned below the plugged connection for the detergent hose (B).
Our shelf (C) WD203.0663, or alternatively our lockable cabinet WD203.0666, is suitable for use.

- There are plugged holes (4) for the detergent hose both at the back and on the side of the machine. Alternatively, the lower punch mark on “the back” can be used.
- The detergent hose is connected to the pipe (A) at the top of the chemical washing tank on the right-hand side (see the figure below). There is a connection nipple in the pipe (B).
- If detergent paste is being used, the connection nipple must be removed and the hose connected directly to the pipe (A).
- If liquid detergent is used, the nipple must be left in the pipe. Drill a hole through the nipple and connect the hose to the nipple.
- The measuring cell for measuring the concentration of detergent in the washing water must be put in the bottom of the tank. On the inside bottom of the tank next to the heating element, the letter “C” is stamped into the metal to mark where the hole should be drilled.
- The water outlet for detergent (5) is on the incoming water pipe (2).

When drilling holes, it is important that the following points should be observed:

- Use sharp tools so that panels do not become unnecessary hot. Red-hot panels can rust in the future.
- Always drill from inside the machine.
- Remove all metal shavings carefully both from the machine and tank before refilling with water. Shavings left in the tank can cause corrosion.

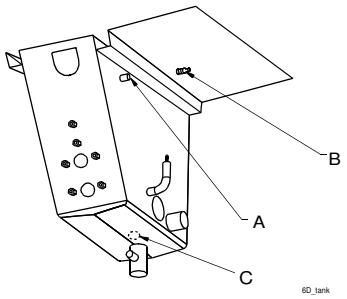

Connecting the detergent hose
Marking for measuring cell

A=Connection in the tank
B=Connection nipple
C=Marking in bottom of tank for measuring cell

For information about electrical connections, see the wiring diagram.

If equipment for a different type of detergent is used, it should preferably be put on the wall behind the machine to avoid holes being drilled unnecessarily in the machine.

The machine can also be equipped with detergent and drying agent equipment via external connections. See the wiring diagram for the correct connection.

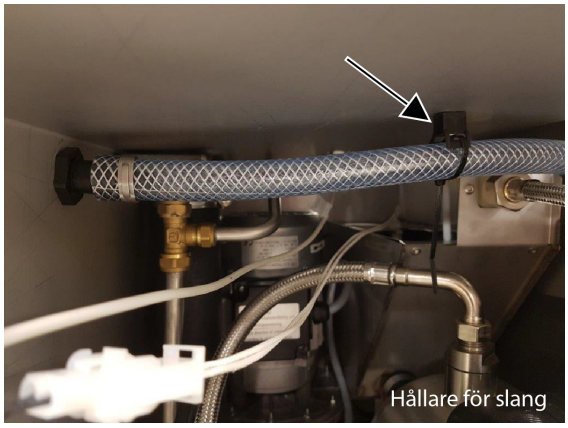

Holder for connections for detergent and drying agent

The process of setting the detergent and drying agent dispenser is described in the ADJUSTMENT INSTRUCTIONS.

24V AC or 230V AC power supply for detergent and drying agent dosing via relay 9/J71 and relay 11/J73

The machine is supplied with a 230V closing function between J71-101 and J71-102.

The detergent and drying agent dosage system can take its power from two relays on the data card. The relays can be dead, with no power supply, or they can be connected to a 24V AC or 230V AC supply to power the dosage system. Each relay has a contact for connecting the equipment. Relay 9 for detergent is connected via a 3-pin J71 contact. Relay 11 for drying agent is connected via a 2-pin J73 contact.

- For correct connection at X10, see the machine's wiring diagram.
- 230V AC equipment should not draw more than 1.5A.
- 24V AC equipment should not draw more than 1.5A.

The ADJUSTMENT INSTRUCTIONS chapter in the service manual describes when and how the relays must be switched on (see section “setting options for relay 9/J71 and relay 11/J73”).

Relay 9/J71. Dead closing function (230V/400V machine)

To use the closing function without a power supply, follow these instructions:

- Disconnect the blue 0.75mm² wire from connector N1 or N2 in the electrical cabinet to contact J71-102.
- Disconnect the black 0.75mm² wire from connector X10 to contact J71-105.
- Contact the equipment to be controlled to contacts J71-101 and J71-105.

Relay 9/J71. Relay 9. 24V AC version (230V/400V 3-phase machine)

To connect a 24V AC power supply to the contact, follow these instructions:

- Disconnect the blue 0.75mm² wire from connector N1 or N2 in the electrical cabinet to contact J71-102.
- Disconnect the black 0.75mm² wire from connector X10 to contact J71-105.
- Contact the equipment to be controlled to contacts J71-101 and J71-102. There will then two connectors on contact J71-102.

Relay 11/J73. Dead closing function (230V/400V 3-phase machine)

To use the closing function without a power supply, follow these instructions:

- Contact the equipment to be controlled to contacts J73-103 and J73-104.

Relay 11/J73. 230V AC version (400V 3-phase machine)

To connect a 230V AC power supply to the contact, follow these instructions:

- If a 230V AC version of J71 is fitted:
  Connect J71-105 to J73-104 using a black 0.75mm² wire.
- If J71 is not fitted or is not a 230V AC version:
  Connect a black 0.75mm² wire from connector X10 to contact J73-104.
- Connect the equipment to be controlled between contact J73-103 and connector N1, N2 or N3 in the electrical cabinet.

Relay 11/J73. 230V AC version (230V 3-phase machine)

To connect a 230V AC power supply to the contact, follow these instructions:

- If a 230V AC version of J71 is fitted:
  Connect J71-105 to J73-104 using a black 0.75mm² wire.
- If J71 is not fitted or is not a 230V AC version:
  Connect a black 0.75mm² wire from connector X10 to contact J73-104.
- Connect the equipment to be controlled between contact J73-103 and connector X10 in the electrical cabinet.

Relay 11/J73. Relay 11. 24V AC version (230V/400V 3-phase machine)

To connect a 24V AC power supply to the contact, follow these instructions:

- If a 24V AC version of J71 is fitted:
  Connect J71-105 to J73-104 using a red 0.75mm² wire.
- If J71 is not fitted or is not a 24V AC version:
  Connect a red 0.75mm² wire from the 8-pin contact on the data card labelled J69-8 to contact J73-104.
- Connect the equipment to be controlled between contact J73-103 and connector X10 in the electrical cabinet.

3.5.7 Adjustment of hinged basket conveyor

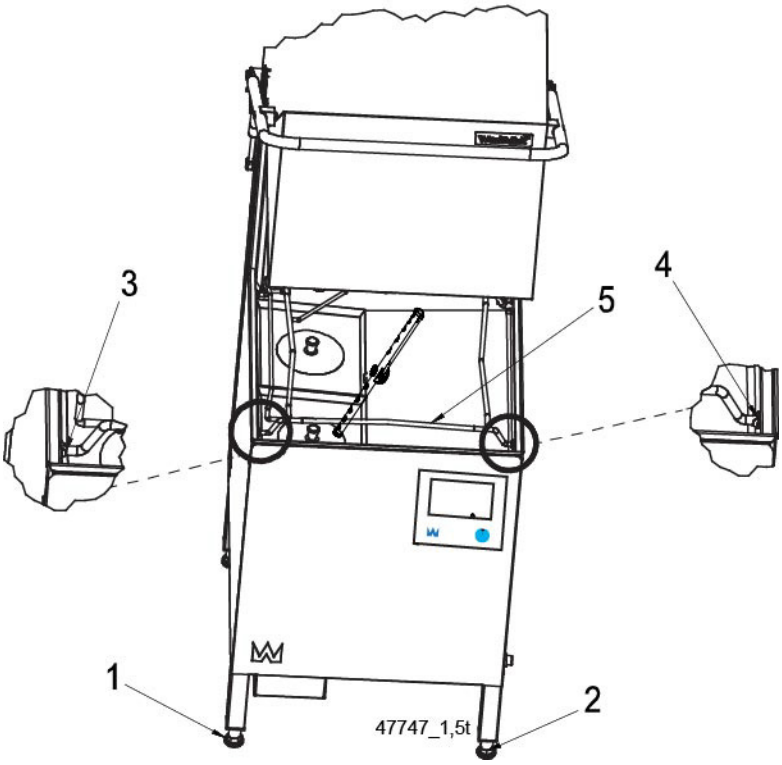

- Adjust the machine so that it is level by adjusting all four feet so that they are in full contact with the floor. Use a spirit level.
- Fill the machine.
- Lift the basket conveyor (5) up and down and adjust leg 1 and leg 2 until the basket conveyor is in the middle of both supports 3 and 4.
- The legs must be adjusted in pairs if any further adjustment is required (to the side, forwards or backwards).

3.5.8 Condensation unit with heat recovery through the heat recovery unit (option)

- NOTE! Machines with heat recovery are also equipped with a break tank.
- Should always be combined “Automatic hood lift”.
- Always use cold water connection if the machine has a condensing unit.

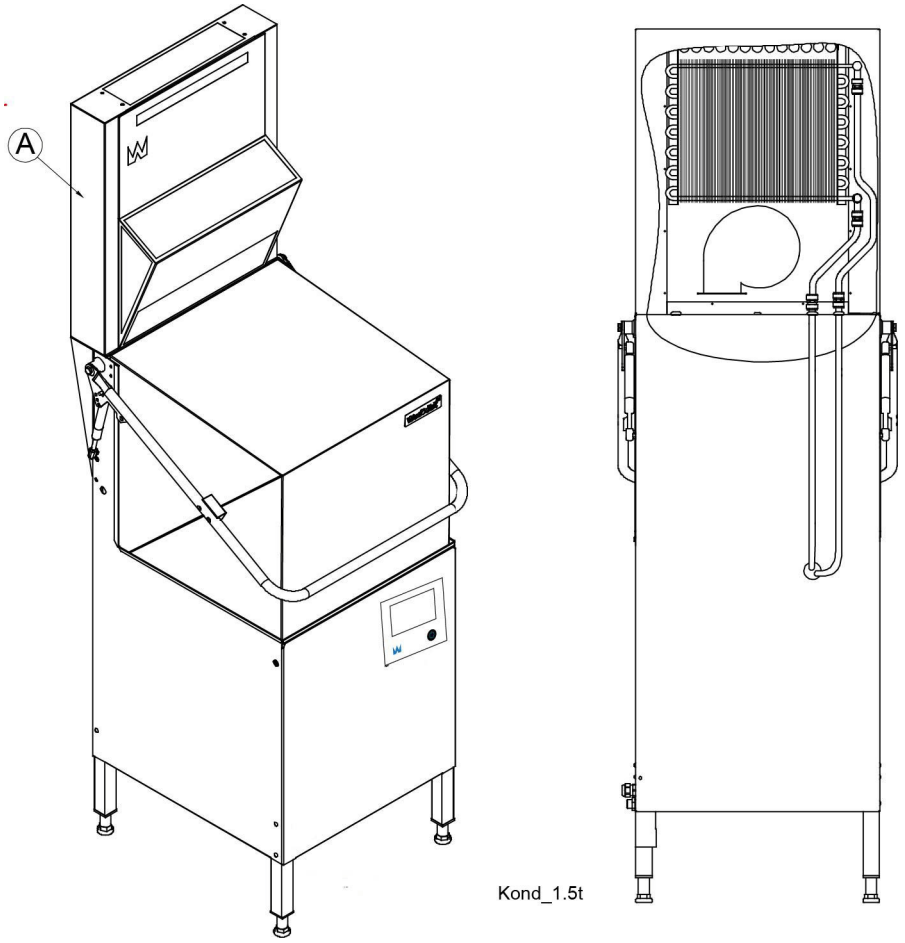

A=Heat recovery unit

Fitting the condensation unit

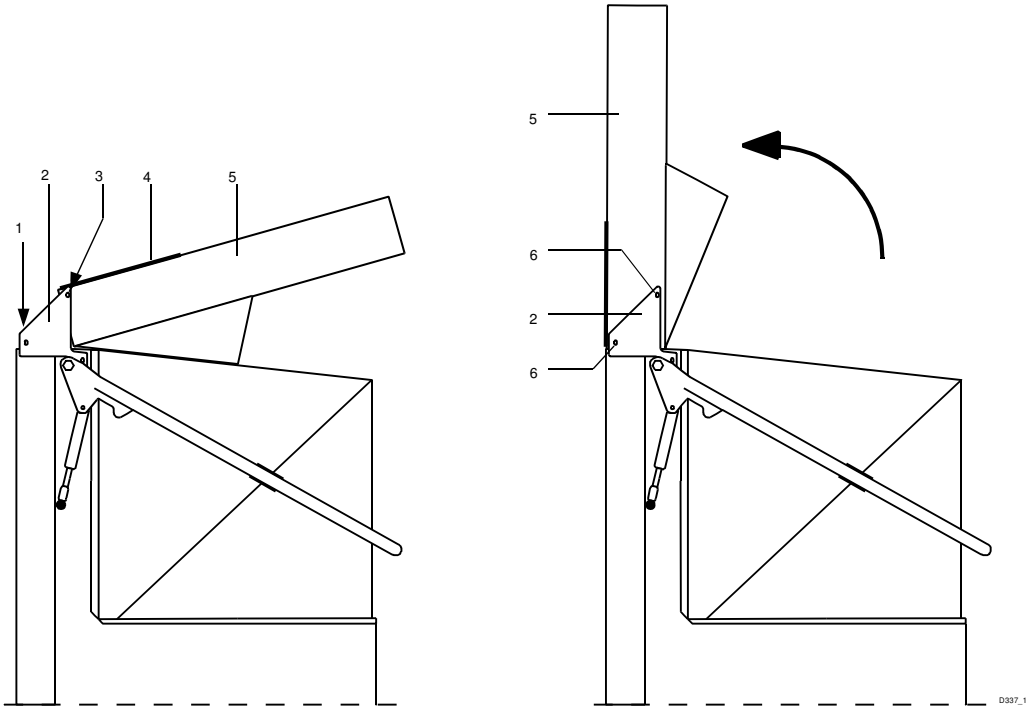

1. Position of the mounting points for the condensation unit
2. Bracket
3. Screw
4. Cover plate
5. Condensing unit
6. Screw and washer

- When the machine is delivered, the condensation unit (5) is folded down on top of the machine. It is fastened to the bracket (2) with screws (3) during transport. Remove the screws.
- The screws used to fit the condensation unit on the machine are screwed into the mounting points on top of the machine (1). Remove the 5 screws.
- Remove the cover plate (4).
- Lift up the condensation unit (5) and fasten it to the machine at (1) using the five screws and the flange provided.
- Fasten the condensation unit to both brackets (2) with the screws and washers at (6).
- Fit the cover plate (4). The screws for the cover plate are supplied in a plastic bag.

3.5.9 Steam hood with extractor (option)

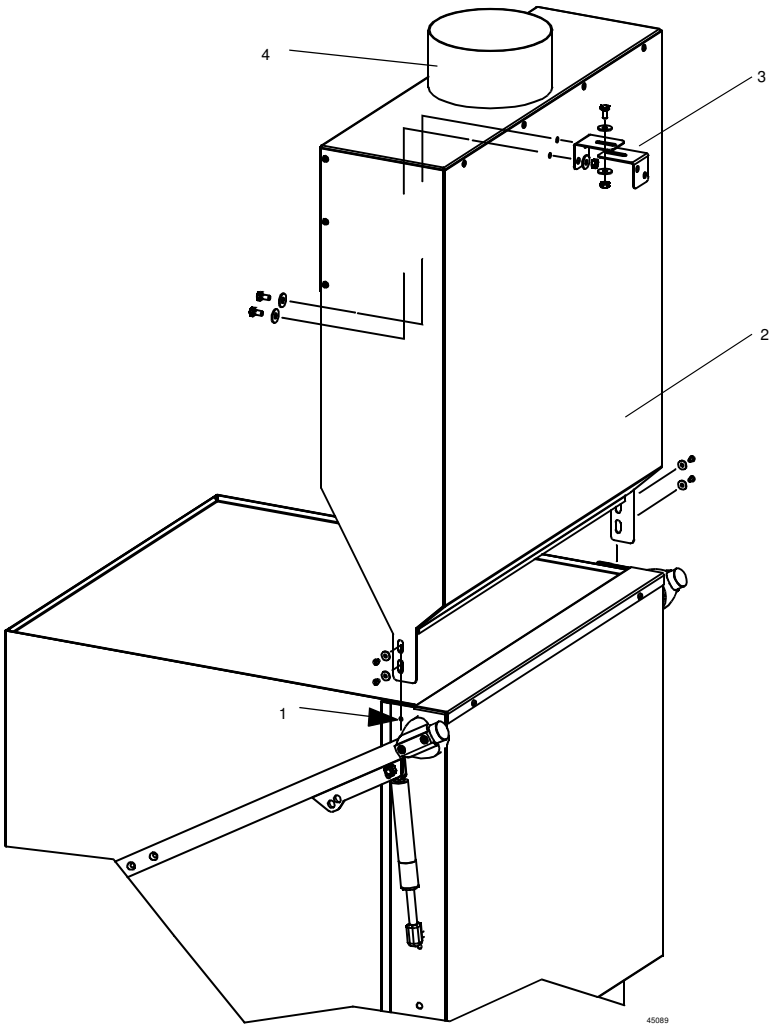

Steam hood with extractor

1. Existing screws
2. Steam hood
3. Bracket
4. Connection for ventilation ø 160 mm

- Undo the existing M4 screws at (1).
- Replace the existing screws and washers with the longer M4 screws and the larger washers provided. The steam hood (2) is fastened to (1) using these screws.
- Screw one bracket (3) firmly to the wall behind the machine. The other bracket must be put in the corresponding position on the back of the steam hood. Two holes 7 mm in diameter must be drilled through the plate.
- Screw both the brackets (3) together with the screws, washers and nuts provided.
- The ventilation duct is connected to (4).

3.5.10 Heat exchanger, heat recovery through the wastewater (WD-6S & WD-7S) (option)

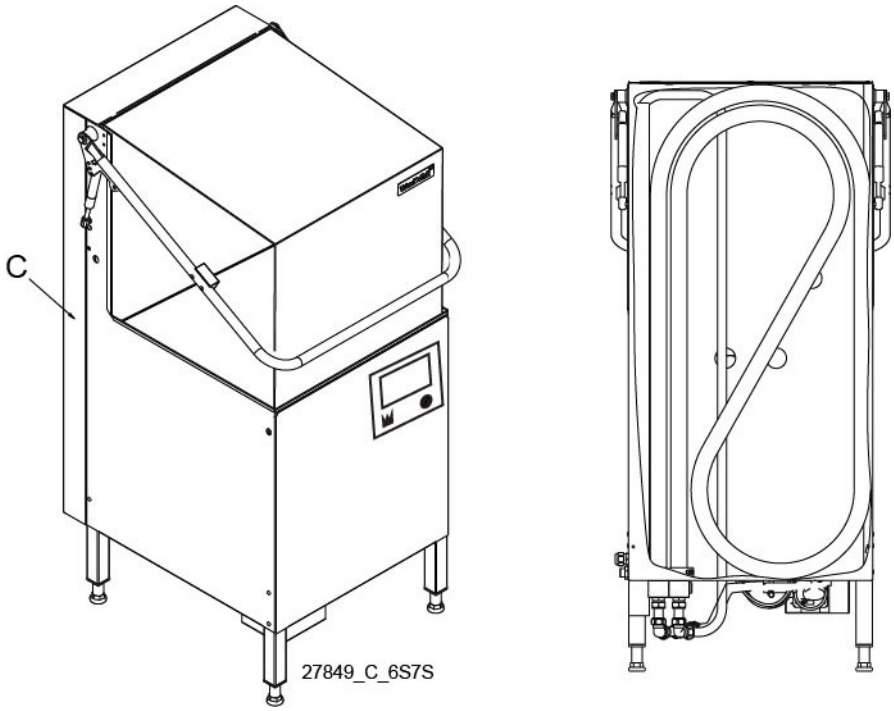

C= Heat exchanger

- Always use cold water connection if the machine has a heat exchanger.
- Machines equipped with a heat exchanger are also equipped with a drain pump.
- Not in combination with two water connections (option) or WD-PRM6 S/ WD-PRM7 S.

3.6 Installation and connection of auxiliary equipment and options

- Once the machine is in place and has been adjusted horizontally and vertically, the auxiliary equipment can be fitted.
- The machine can be equipped with a number of options. Check what your machine is equipped with, which will vary depending on market.

The various options normally place no specific requirement on the installation. Brief descriptions of certain options are provided below.

3.6.1 ECO flow (condensing unit)

- A hot and cold water connection is required.
- The machine has a 12kW booster heater, but can also optionally be fitted with a 9kW booster heater.
- Automatic rinse cleaning of heat recovery unit.
- Can be retro-fitted. The following kits should then be used:
  WD-6S: WD741.7017N
  WD-7S: WD741.7018N
  WD-8S: WD741.7065N

3.6.2 Drain pump

Can be retro-fitted, then use kit WD741.7003.

3.6.3 Marine design

Special machine feet and special connection voltage.

3.6.4 Adaptation for WD-PRM6 S/WD-PRM7 S

See the manual for WD-PRM6 S/WD-PRM7 S.

3.6.5 Automatic start

- The hood on the machine will close and washing will start when the washing basket is pushed into the machine.
- Can be retro-fitted, then use kit WD741.7053.

3.6.6 WD-RO150

Our water treatment unit WD-RO150 can be connected to the machine. Certain adjustments to the reference values may however be necessary.

3.6.7 Sinks, conveyors and roller conveyors

NOTE! When connecting sinks and conveyors, no holes must be drilled on the front of the machine.

The machine can be positioned so that it can be straight-loaded or corner-loaded. Depending on the position chosen, the removable side support (4) on the basket conveyor must be positioned as shown in the figures below.

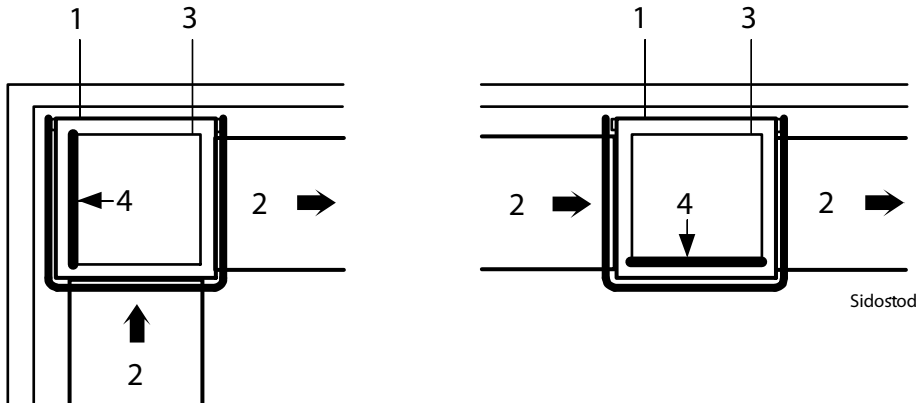

Position of the side support

1. Dishwasher
2. Sink
3. Basket conveyor
4. Side support

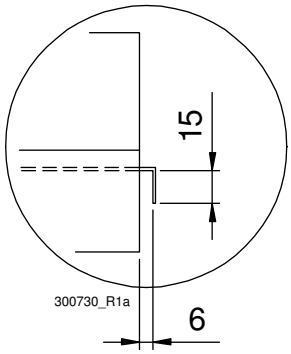

Detail of sink cover

The connection profile must look like the one shown in the drawing. The distance of 6 mm may be reduced, but must not be less than 3 mm.

Connection to the left- or right-hand side of the machine

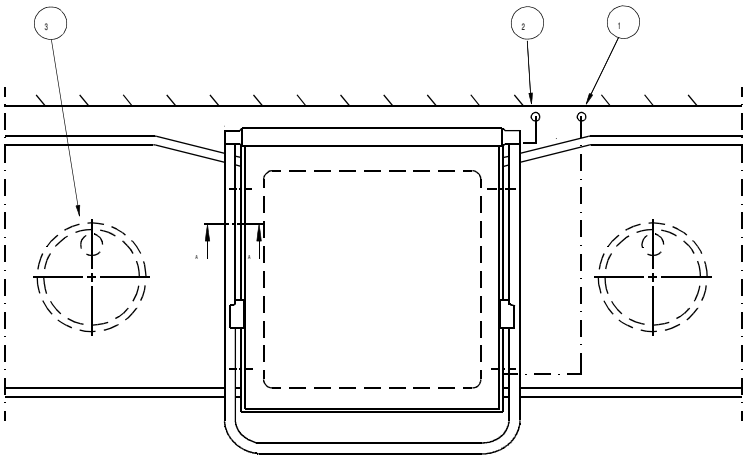

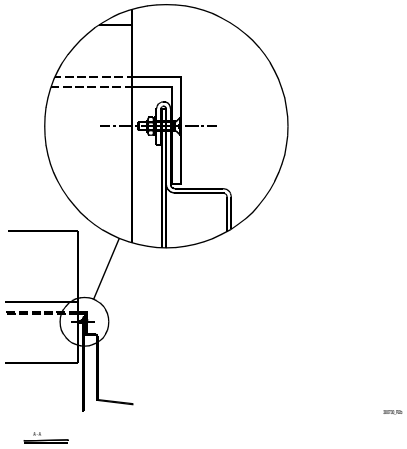

1. Water connection
2. Electrical connection
3. Floor drain

- Attach the sink connection to the machine and then adjust.
- Drill two ø 4.5 mm holes through the sink connection and the machine, approx. 100 mm from each outer edge.
- Countersink the holes.
- Seal with silicone between the connection and the machine.
- Secure the sink with countersunk M4 screws, grommets on the outside surface and nuts. Alternatively, you can secure the sink to the wall with wall brackets.

Use a spirit level to check that the sinks are horizontal and adjust the height, if necessary.

Connection to the front of the machine

If the machine is to be corner-loaded, there must be at least 300 mm of free space in front of the machine to allow the electrical cabinet and the door of the storage cabinet for detergent and drying agent (option) to be opened. It can be helpful to use WD240.4517.

The legs on the sink connected to the front of the machine must be at least 300 mm away from the machine to allow the machine to be accessed for servicing.

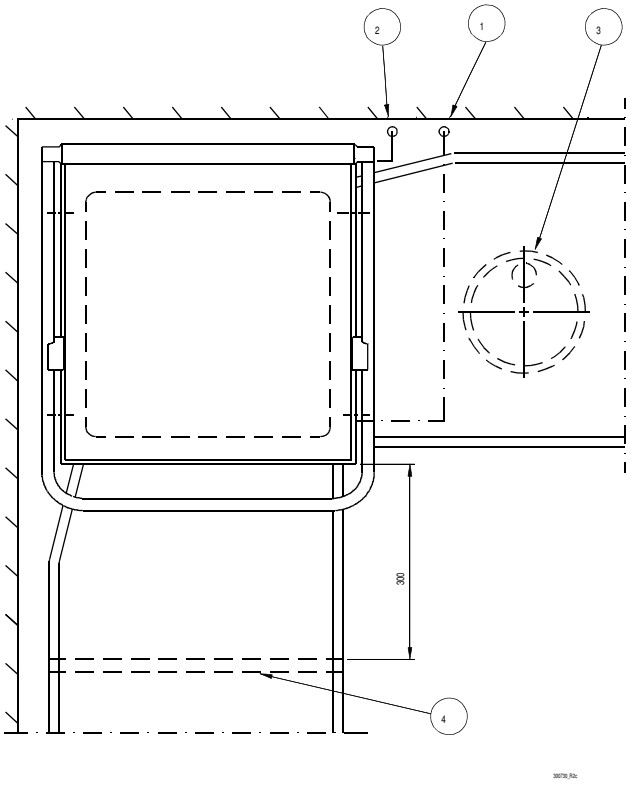

1. Water connection
2. Electrical connection
3. Floor drain
4. Legs

- Attach the sink connection to the machine and then adjust.
- Seal with silicone between the connection and the machine.
- Secure the sink to the wall with wall brackets.

Use a spirit level to check that the sinks are horizontal and adjust the height, if necessary.

3.7 Trial operation

Prepare the machine for trial operation with the help of OPERATING INSTRUCTIONS. The instructions describe the measures that must be taken to prepare the machine for operation.

3.7.1 Start-up schedule

This should be completed when the machine is started up and used.

Machine type:
Machine serial number:
Date of installation:

Read the installation and user manuals carefully. Then check the following points:

1. Check:

- Water and drain connections.
- That the machine is horizontal.
- That there is detergent and drying agent in the machine.
- That the filters and level pipe are in place.
- That the overheating protection device has been reset (not activated).

2. Filling the machine

- Turn on the power switch and any circuit breakers.
- Close the hood.
- Fill the machine with water in accordance with the manual.
- Bleed the hood lifting cylinder (option) as per the manual.

3. Start the machine

- Check the direction of rotation of the pumps.
  NOTE! If the direction of rotation is incorrect, the phase must be inverted on the lockable power switch.
- Empty the machine and refill it.
- Check the final rinse flow during filling.

4. Check the setting of the reference values

- All the reference values have been set to the recommended values on delivery.
- Check the temperatures in the tank and booster heater

5. Run a number of washes complete with loads and check

- There are no water leaks.
- The hood switch operates.
- The function for “Automatic hood lift” operates (option).
- The “Automatic start” function (option).
- The water temperatures are maintained.
- The washed items are cleaned and dried.
  Note: When the machine is equipped with detergent and drying agent dosage (option), these are set approximately at the factory; contact your detergent supplier for a more precise setting.

6. Final check

- Empty the machine and switch off the power using the power switch or equivalent.
- Re-tighten all connections on contactors and any circuit breakers.
- Set all circuit breakers to the ON position.
- Display the quick guide supplied with the machine.

7. Train the dishwashing personnel

- Washing.
- Care (daily, weekly and other frequencies).
- Recommendation for annual service.

3.8 Documentation

For correct use and servicing, it is essential that the documentation accompanying the machine is made available to personnel who will be using the machine. The installation and user manual, which describes handling and care among other things, should be stored near the machine.

4. Operating instructions

Read the chapters GENERAL INSTRUCTIONS and SAFETY INSTRUCTIONS carefully before starting work.

This chapter describes what must be done with the machine:

- Before washing
- How washing should be performed
- After completed washing
- In the event of error messages and troubleshooting

The use of the machine is dependent on how the machine is equipped.

When the machine has a QR code on the front and this is scanned, you will be taken to WD's website with any user files for the machine.

When the machine is not in use for an extended period of time, e.g. overnight, over a weekend or similar, the machine’s power supply must be isolated, the water supply shut off and the machine left open.

- The machine can also be connected to a WD-PRM6 S/WD-PRM7 S.
- The procedure for start-up, washing, etc. is described in the manual for the WD-PRM6 S/WD-PRM7 S.

As an option, the machine can also be equipped with a USB socket for downloading reports. When the machine is equipped with this socket, it will be located close to the panel.

- The user can download a customer report by connecting a USB memory stick (with an LED which should face “upwards”) to the socket, which is located close to the panel.
- The USB stick (which is supplied with the machine upon delivery) must contain the file “ESP_1_5_On.cfg” and a folder named "Protocol”.
- The report contains “Current machine model”, “Operating information” and "HACCP” if this function is activated.
- When the machine is switched on and ready to use, the USB stick is connected. The report is then downloaded. The LED on the USB stick flashes during downloading and switches to a steady light when the download is complete. Wait a few more seconds before removing the USB stick.

4.1 Before washing

4.1.1 Machine design

WD-6S & WD-7S & WD-8S

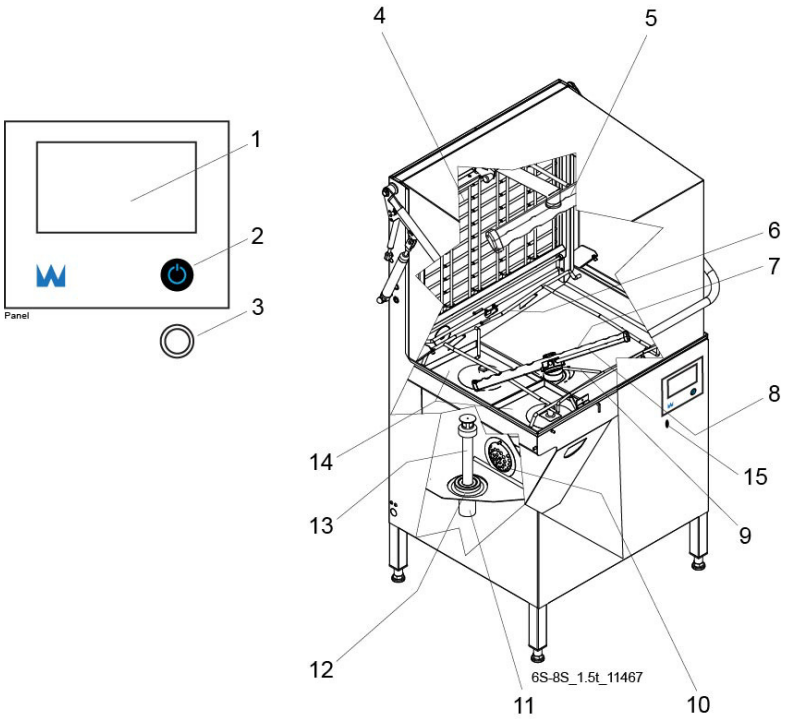

1. Touch display
2. On / Off button
3. External button for opening/closing the hood (option)
4. Hinged basket conveyor, fitted with folding metal shelf (WD-8S) (option)
5. Washing and rinsing arm
6. “Automatic start” (if the machine is fitted with this option, the hood is closed automatically when a basket is loaded in the machine.)
7. Wash nozzle
8. Rinse nozzle
9. Lever for Normal / Heavily soiled washes (WD-7S & WD-8S)
10. Pump filter
11. Drain filter (on machines with a drain pump)
12. Rubber sleeve
13. Level pipe (replaced by a bottom filter if the machine is connected to a WD-PRM6 S/WD-PRM7 S)
14. Tank filter
15. Lifting knob (WD-6S) (option)

In the following chapter, figures are given in brackets to clarify what needs to be done. These numbers refer to image and list above.

The machine's display and screen

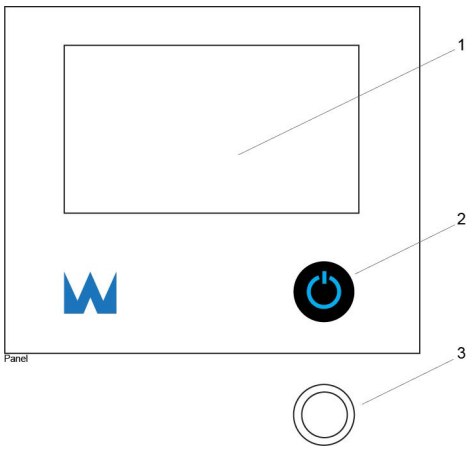

1. Touch display
2. On / Off button
3. External button for opening/closing the hood (option)

The On/Off button performs a number of functions, including:

- Illuminates with a pale blue light when the machine is switched off
- Illuminates at full intensity when the machine is switched on
- Flashes in the event of an alarm and also used to acknowledge alarms

As an option, machines that are equipped with automatic hood lift (option) can also be equipped with an external button (3) for opening/closing the hood.

4.1.2 Preparations before filling

Check:

- That the machine and removable parts have been cleaned. If not – clean them
- That there is no dirt in the wash nozzles (7) or rinse nozzles (8)
- That removable parts are correctly in place
- The amount of detergent and drying agent (option)
- That the stopcock for the water to the machine is open
- That the power switch is in the ON position
- That the machine's control button ON/OFF (2) is switched on and is illuminated bright blue

Remember:

- Ordinary washing-up liquid must not be used in the machine or for soaking. Contact your detergent supplier regarding the choice of a suitable detergent. Washing-up liquid causes a build-up of foam, produces poor wash results and can damage the machine.
- Steel wool must not be used for pre-treating the dishware.
- Only detergent and drying agent intended for industrial machines may be used.
- If using liquid detergent and drying agent, the same make and type of detergent and drying agent should be used.
- If the machine is designed for glass washing and equipped with a condensing unit, detergent intended for aluminium should be used.
- If the machine is equipped with a condensing unit, dishware should be removed from the machine as soon as the wash cycle is complete so that recondensation does not occur.

The machine's display

The following symbols and icons may be displayed in the various fields of the panel (some depending on machine type). When the symbol is black, it can often be pressed. When it is grey, this usually indicates a part of the programme. The symbols can be displayed in different places and in different colours in different combinations.

Symbols and Icons			
Symbol	Explanation	Symbol	Explanation
	Start and shutdown screen for the machine. Displayed with the name of the machine when the machine is started or immediately before it is switched off.		Tank symbol: This symbol flashes at low tank level in programme selection mode P0 and when the machine is carrying out supplementary filling or if a rinse is extended because of low tank level during the current wash cycle.
	Rinse symbol: This symbol will flash if a rinse does not start because of a low level in the break tank.		Temperature symbol: Symbolises the step involving heating of the machine during the filling process. Will appear and flash plus the relevant temperature indication is anything is wrong.
	Hood symbols: Open the hood. Button to open the hood with automatic hood lift. Close the hood. Button to close the hood with automatic hood lift.		Filling symbol: Symbolises the step involving the filling of the tank during the filling process.
	Detergent symbol: Symbolises the step involving detergent mixing during the filling process.		Button to cancel the current programme and jump to rinse.
	Programme selected, P1: * Normal load glass * Glass washing * Generic Selected programme is displayed with a large icon in the centre of the carousel menu.		Programme NOT selected, P1: * Normal load glass * Glass washing * Generic Unselected programme is displayed with a small icon in the carousel menu.

Symbols and Icons			
Symbol	Explanation	Symbol	Explanation
	Programme selected, P2: * Normal load plates * Normal load glass washing * Generic Selected programme is displayed with a large icon in the centre of the carousel menu.		Programme NOT selected, P2: * Normal load plates * Normal load glass washing * Generic Unselected programme is displayed with a small icon in the carousel menu.
	Programme selected, P3: * Normal load, heavily soiled load * Glass washing * Generic Selected programme is displayed with a large icon in the centre of the carousel menu.		Programme NOT selected, P3: * Normal load, heavily soiled load * Glass washing * Generic Unselected programme is displayed with a small icon in the carousel menu.
	Programme selected, P0: Energy saving function. Is active on the display when the hood is closed and P0 is selected.		Programme NOT selected, P0: Unselected programme is displayed with a small icon in the carousel menu.
	Wash cycle complete. Displayed when the wash cycle has finished. - While the hood is being raised (automatic hood lift) - Until the hood exits the closed position (no automatic hood lift)		
	Rinse programme for machines without a drain pump.		Removal of level pipe and checking of the level in the tank.

Symbols and Icons			
Symbol	Explanation	Symbol	Explanation
	Rinse cleaning	OFF	Forced shutdown of the machine which is marked before the machine is switched off after the rinse programme.
	Emptying and rinse programme for machines with a drain pump.		Emptying the tank.
	Water change programme		Navigation menu * Statistics * Machine info * Detergent setting * Display setting
	Consumption data		Number of wash cycles since the power was switched on.
	Number of wash cycles since machine installation.		Calculated electricity consumption since the power was switched on.
	Calculated water consumption since the power was switched on.		Detergent dosage.
PRIME 5 SEC	Button to operate the detergent pump for 5 seconds.		Arrows to adjust the selected value up or down.
	About the machine.		Icon to access the menu for setting the brightness of the “W” and the display.
	Symbol for adjusting the display light.	W	Symbol for adjusting the brightness of “W”.
	Diagnosis		Water meter BV1 Water meter BV2
	Digital signal active, 0		Digital signal active, 1
	Back to previous menu		Relay test

Symbols and Icons			
Symbol	Explanation	Symbol	Explanation
< >	To previous relay in relay test To previous reference value To next relay in relay test To next reference value		Relay off Relay on
	Settings		
	Save changes		Cancel
	INFORMATION ALARM: Displayed in combination with IF and a number which indicates the warning alarm that is active.		ERROR ALARM: Displayed in combination with ER and a number which indicates the ERROR alarm that is active.
	Request to open and close the hood to start filling of the tank. The icon will flash.	ENERGY SAVE MODE	Energy saving mode activated. Displayed when the machine has been inactive for an hour.
Zzzz	Sleep mode activated. Displayed when the machine has been inactive for 8 hours.		

4.1.3 Filling and heating the machine

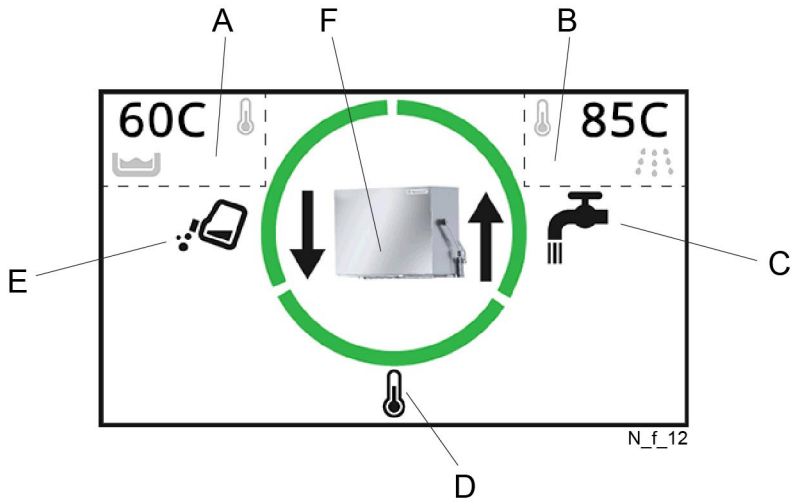

- A: Here, the following are displayed: current temperature in the washing tank, tank symbol and the thermometer which flashes during heating (before detergent mixing starts).
- B: Here, the following are displayed: current temperature of the rinse water, rinse symbol and, in some cases, a thermometer.
- C, D, E: Here, the following are displayed: various symbols showing what happens during different processes in the machine
  C: Filling of tank
  D: Heating of tank
  E: Detergent mixing
  Once a step has been completed, that part of the circle turns green
  The step that is in progress is shown in blue
  Processes that have not yet started are shown in white
- Here, the middle image (F) contains a request to open and close the hood. Different images will be displayed depending on the equipment fitted to the machine. NOTE! The machine will NOT be filled when the hood is open.

This is what you should do:

- Switch on the power supply to the machine using the power switch.
- Switch on the power supply on the machine using the 0/1 pushbutton (2). The display shows the following image, (depending on the machine type).

Nse_6S7S8S

- Close the hood. You can see what is happening in the machine on the display.
- Filling and heating for a standard machine take approx. 20 minutes at an incoming water temperature of 55℃. The heating time is dependent on the incoming water temperature.
- When the machine has been filled, the current temperature in the washing tank will be shown at (A) in the display. If the washing temperature falls below the set value by more than 5℃, the thermometer flashes.
- The machine cannot start washing until the set temperature minus 5℃ for the washing water has been reached, if this function is selected. The normal operating temperature for the washing phase is 60℃.

4.2 Washing

To reduce the risk of strain injuries, the dishware should be stacked in baskets positioned on the attached auxiliary equipment so that these may be moved along slide rails or rollers. Grid baskets or basket conveyors with grid sections (WD-8S) (options) may be used when washing heavy dishware to reduce straining. Using these also allows the dishware to be stacked directly in the machine.

4.2.1 Positioning of dishware in baskets

The machine is supplied with washing baskets depending on the equipment level. The washing baskets are used according to the following:

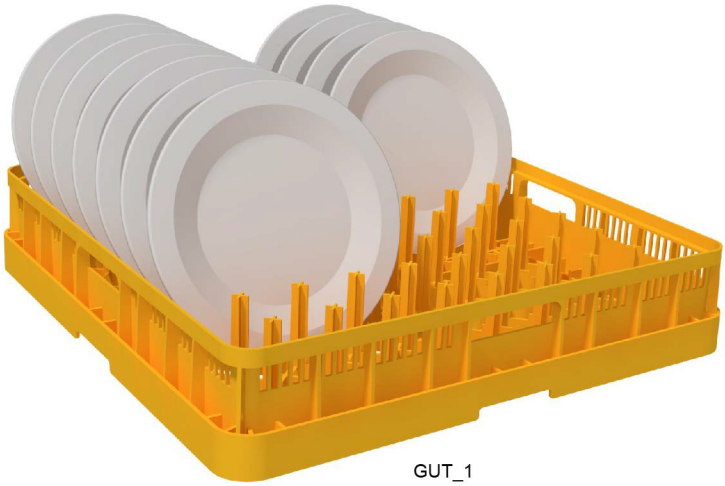

The yellow basket is used for side plates, trays, plates, etc.

The blue basket is used for glasses, cups and canteens

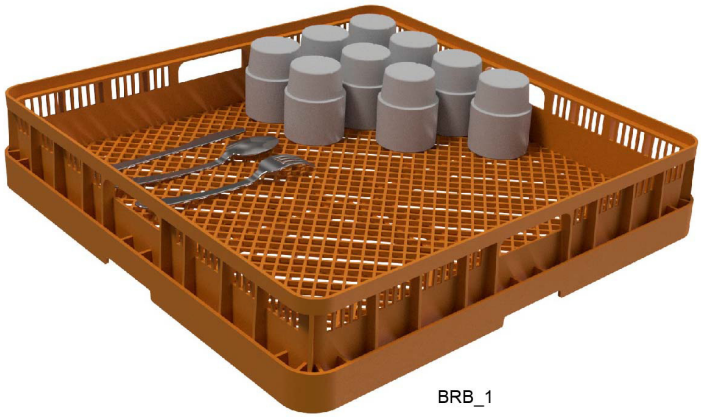

The brown basket is used for cutlery during the first wash

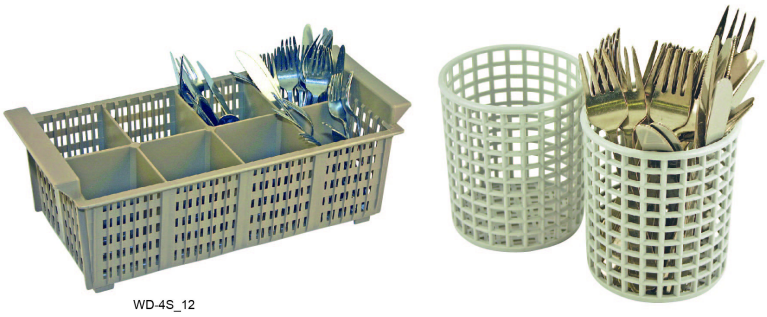

Cutlery must therefore be placed in designated baskets before the second wash, the baskets above are placed in the blue basket

There are also various special baskets, racks and accessories (option) for use in the machine.

Large format dishware must be placed in the machine without a basket, or alternatively using the collapsible basket conveyor, which can be equipped with a metal shelf (WD-8S).

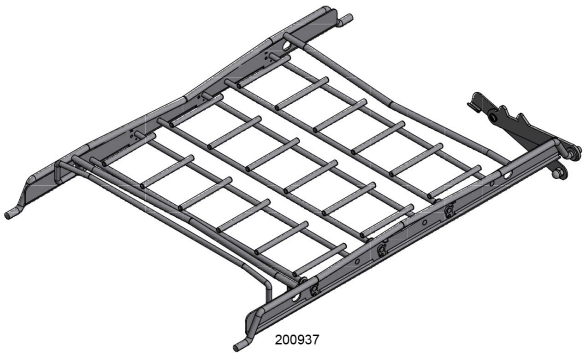

Basket conveyor with metal shelf (option), (WD-8S)

Glass washing (WD-6S) (option)

The machine is supplied with a washing basket fitted with an elevation frame and dividers.

Washing baskets adapted for glass washing

Tilting of washing basket during the final rinse (WD-6S) (option)

The knob (15) is used if the washing basket is to be tilted during the final rinse.

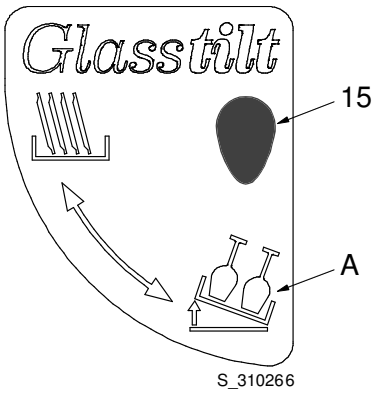

Turn the knob (15) towards symbol (A) if tilting of the basket is desired during the final rinse

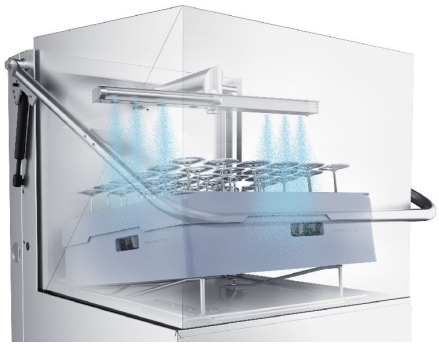

The figure shows a tilted basket

4.2.2 Selection of Normal load (-) / Heavily soiled load (+) (WD-7S & WD-8S) and programme

Selection of Normal load (-) / Heavily soiled load (+) (WD-7S & WD-8S)

The machine can be set to two wash modes. - = normal wash or + = heavily soiled wash. A lever (9) inside the machine is used to adjust the setting.

- When washing pans and very deep items, the heavily soiled programme should be selected.
- When the heavily soiled programme is selected, there is increased washing pressure from the lower washing arm.
- Depending on the dishware, the basket conveyor, possibly equipped with a metal shelf (WD-8S) (4) can be folded down (option) if necessary.

Selecting a programme

The control panel has three programme buttons: P1, P2 and P3.

- P1=Lightly soiled items (e.g. trays and glassware)
- P2=Normal load
- P3=Heavily soiled items

The washing temperature and chemical washing time for each programme is set on delivery. The operator can change these values if required.

To select a programme, click on the required programme or alternatively “swipe” until the required programme is displayed in the centre with a large icon.

To start the selected programme (the programme that is displayed in the centre of the display), the hood must be closed. On machines with automatic hood lift, the symbol for selected programme acts as a button to confirm the programme selection and closes the hood. On machines without hood lift, the programme is started by closing the hood manually.

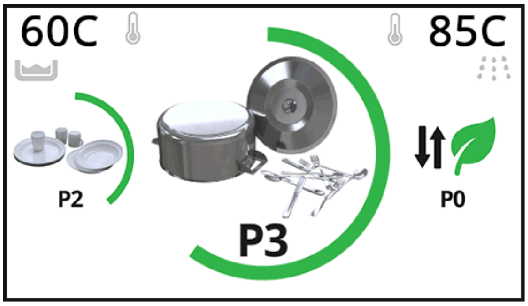

N D 1

The illustration shows a “Standard” machine with programme P3 selected.

In addition to the various programmes P1, P2 and P3, there is an energy saving mode P0. When this “programme” is selected, the machine's hood can be closed without the machine starting. This mode prevents unnecessary energy consumption in the event of extended operating breaks without shutting down the machine completely.

Standard machine

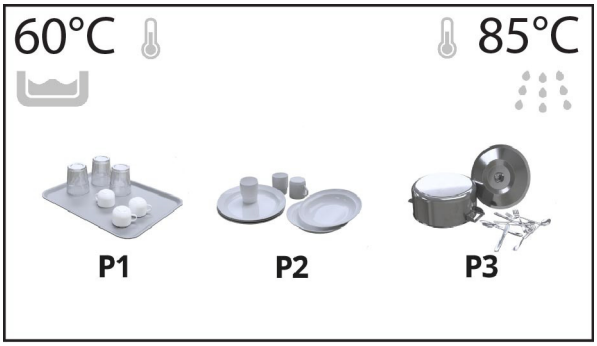

D_N

- P1: Glass
- P2: Plates
- P3: Potwash

Glass washing machine (WD-6S) (option)

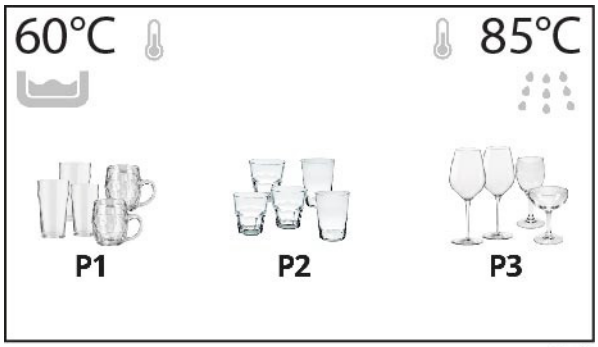

D_G

- P1: Beer glasses
- P2: Tumblers
- P3: Wine glasses

WD-6S			
Programme	Chemical washing time	Rinsing temperature	Total programme time
Beer glasses (P1)	1.0 min.	65°C	1.3 min.
Standard glasses (P2)	1.0 min.	85°C	1.3 min.
Wine glasses (P3)	2.0 min.	65°C	2.3 min.

Generic

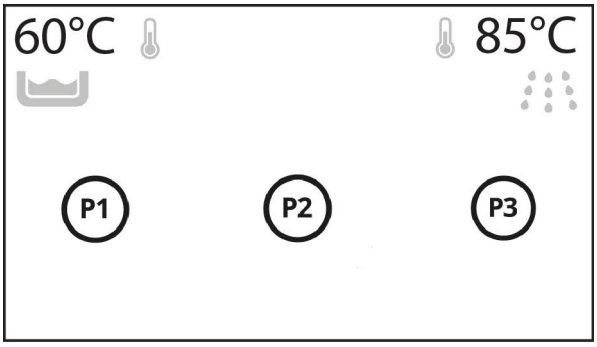

D_Ge

- P1
- P2
- P3

4.2.3 Washing

Make sure that the items are in a position where they cannot move out of the washing basket during the washing and rinsing phases.

Display when a wash is in progress

The image below is displayed when washing is in progress.

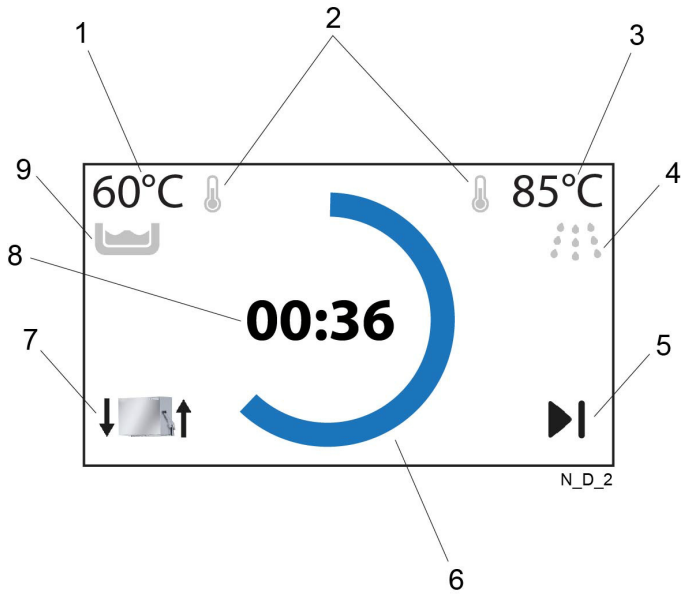

1. Tank temperature
2. Not normally displayed. Displayed and flashes when one of the temperatures has become incorrect.
   “Wash side”: The temperature in the tank is 10 °C below the set reference value.
   “Rinse side”: The chemical wash is extended, as there is an incorrect temperature for rinsing the dishware.
3. Rinsing temperature
4. Rinse symbol, flashes when the chemical wash is extended due to low level in the break tank
5. Button to cancel the current wash and jump to rinse; only displayed when this is possible
6. Programme indication; the blue “circle” gradually fills as the programme continues
7. Hood lift button (only when the machine has automatic hood lift); cancels the current wash and jumps directly to the rinse step
8. Countdown of remaining programme time
9. Tank symbol, flashes when the rinse is extended due to low level in the tank between two wash cycles

When the wash time is extended due to incorrect temperatures or incorrect water levels, the countdown of the remaining wash time is paused.

- Check that the detergent is suitable for the items.
- Remove larger food particles by rinsing the items using a hand shower. The water in the hand shower must not exceed 40℃. Place the items to be washed in the basket.
- Open the hood.
- Select normal load (-) or heavily soiled load (+) using the lever (WD-7S & WD-8S).
- Select program P1, P2 or P3.
- Slide the basket into the machine. If the machine is equipped with automatic start (option), the hood will now close and the machine will start the wash and the remaining washing time will be shown on the display.
- Close the hood. The machine starts washing with the selected programme. The display now shows the program's remaining washing time.
- The hood opens automatically once the washing cycle has finished. If the hood is opened during a washing cycle, the machine will stop and automatically start from the beginning once the hood has been closed again.
- Once the machine has stopped, the display shows the last programme to be run. Remove the washing basket and allow the washed items to dry.

P0 is a pause mode and is used in the case of prolonged intervals between washes in order to maintain the tank temperature. The hood must be closed. The machine does not start in P0 mode.

Washing with pre-wash machine WD-PRM6 S/WD-PRM7 S (option)

WD-6S_7S_S med WD-PRM6_7

The start-up and washing procedures etc. are the same as for standard washing. See also the manual for WD-PRM6 S/WD-PRM7 S.

Washing with dual machines (option)

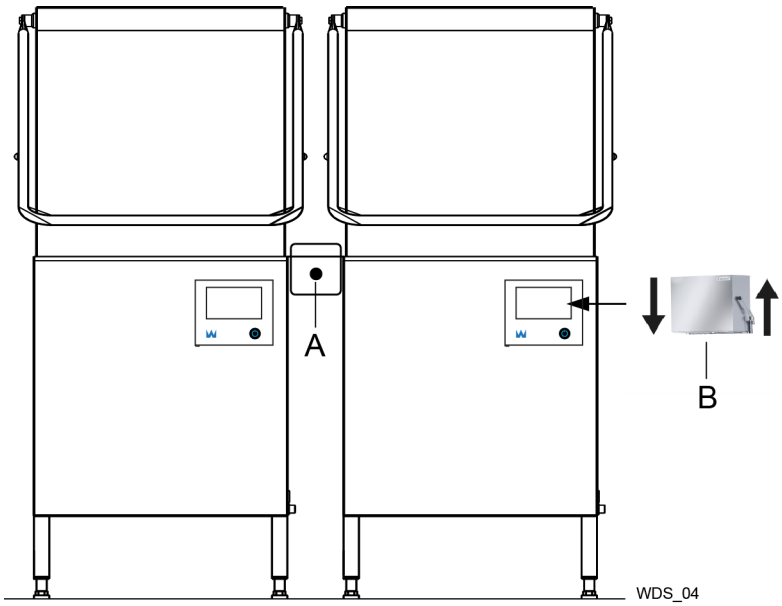

- A = Button for dual-controlled hood lift
- B = Button for controlling the hood lift on each machine

The procedure upon start-up, washing, etc. is the same as when washing with only one machine, except that the hood lift can be operated in different ways.

When using dual machines, the washing capacity is larger. For the maximum possible capacity, the same type of items should be washed at the same time in both machines.

Put the baskets with the same type of items in the machines. Select the same washing programme on the control panels of both machines. Press the button (A) to close the hoods and start the programme.

If the items are of different types, it is possible to use a different programme on each machine, e.g. programme P1 on one machine and P3 on the other. In this case the hoods must be closed using the button (B) on each machine's control panel.

When returning to the same type of item and the same programme, both the hoods must be open in order to be able to use the button (A) at the start of the wash cycle. This may be relevant, if, for example, one machine has been temporarily paused in pause mode P0 with the hood closed.

NOTE! If the washing temperature and washing time are changed in one of the programmes, this setting must be changed on both machines.

4.2.4 Interrupting a current wash programme

It is possible to interrupt the current wash programme.

Opening during chemical washing

- The display returns to the programme selection menu.
- The machine retains the selected programme.
- When the hood is closed again, the programme will start from the beginning.

Opening during a pause

- The remaining pause time is displayed and counts down on the display.
- The circle which indicates where in the wash cycle the programme is pauses at the start of the rinse step.
- When the hood is closed again, the countdown of any remaining pause time resumes and the rinse then starts.

Opening after final rinse

- The countdown and the circle indicating where in the wash cycle the programme is pauses.
- When the hood is closed again, the programme will start from the final rinse.

4.2.5 Display when wash is complete

The image below is displayed when the selected programme has finished.

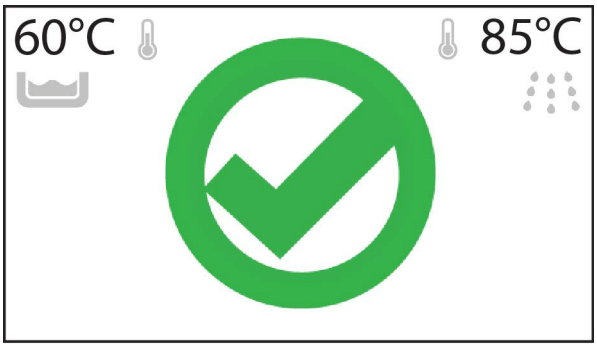

N_D_3

The symbol in the middle is displayed when the selected programme has finished.

- The symbol is displayed until the hood has been manually opened after a wash has finished.
- On machines with automatic hood lift, the symbol is displayed until the hood has been raised after the end of a programme.

4.2.6 Checking the wash result

The dishware should be checked after each wash for:

PROBLEM	CAUSES & MEASURES
Starch spots Misting Protein residues Detergent residues	• **Scraping:** Important to remove as much food particles as possible before washing. This also means that the water in the machine does not need to be changed as often. Scrape better. • **Detergent and drying agent dosage:** If using liquid detergent and drying agent, the same make and type should be used. A service technician should be contacted to rinse the equipment with water when replacing the detergent and drying agent. The dosing affects both detergent and drying results of the dishware. The hardness level of the water affects the consumption of detergent. Contact the detergent supplier. • **Temperatures:** At incorrect temperatures the dishes will not be clean. Contact a service technician if you need to change the set values. • **Programme selection:** Programme with too short a washing time selected. Choose a programme with a longer washing time. • **Cleaning the machine:** Insufficient cleaning of the machine affects the results of the washing. Ensure better cleaning of the machine. • **Placing dishes in baskets:** Incorrectly placed items can mean that the washing water does not reach the items during washing and rinsing. • **Soaking:** Items with hard dried food. Soak the dishes in water. Do NOT use washing-up liquid.

4.2.7 Changing the water

- To achieve the best possible washing results, it is important that the machine is rinsed clean internally and that the water is changed daily. For normally soiled dishware, the water should be changed after around 50 washes. However, always change the water in the event of foam problems in the tank.
- If IF09 is shown on the display, a water change should be carried out as soon as possible.

Machine with level pipe but without drain pump

This is what you should do:

- Select program P0 on the machine
- Remove the level pipe and wait until the tank is empty
- Clean tank strainers and level pipe
- Refit the level pipe and tank strainers
- Close the hood and the machine will refill

Machine with level pipe and drain pump

The hood must be open when the drain pump is running.

This is what you should do:

- Select program P0 on the machine
- Remove the level pipe, the drain pump starts automatically and runs for the set time
- Clean tank strainers and level pipe
- When the tank is drained, refit the level pipe and tank strainers
- Close the hood and the machine will refill

4.3 After use – Cleaning – etc.

HACCP

HACCP is a preventive inspection system to ensure hygiene requirements are met during the washing process and cleaning of the machine. As a result of its design, the machine meets strict hygiene requirements. Regular, thorough cleaning is also important from a hygiene perspective. A machine that is properly cleaned helps produce a good wash result, reduces the risk of dirt accumulating, increases the service life of the machine and reduces the risk of emergency shutdown.

See the WebTool manual for the HACCP alarm options.

4.3.1 Incorrect cleaning methods

NOTE! An incorrect cleaning method may damage the machine. The following points must be observed:

- Do NOT use steel wool as it will cause corrosion to form on the machine.
- If detergent is used, it must not contain abrasives. Detergents containing abrasives will damage the stainless steel panels.
- The exterior of the machine must not be hosed. Water can enter the machine and damage the display and electrical equipment.
- Pressure washers and steam can damage the machine and must NOT be used for cleaning purposes. Never use a pressure washer to clean the floor within 1 metre of the machine. The supplier cannot be held liable for any faults caused by the use of pressure washers on the machine and any such use may invalidate the warranty. There is a risk of splashing even if the floor is hosed down.

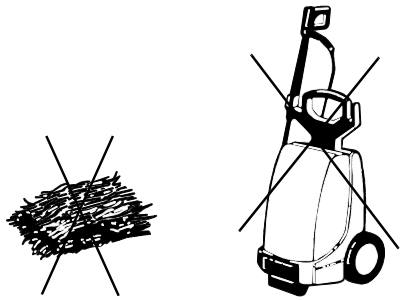

Steel wool and pressure washers must not be used for cleaning

4.3.2 The machine is shut down

Provided that no alarm is active, the machine can be placed in shutdown mode by pressing ON/OFF. In this mode, the following options are available:

- Emptying with internal rinsing and water change
- Navigation menu
- Shutdown without the machine being emptied and rinsed internally

If ON/OFF is pressed again without any selection being made, the machine will return to programme selection or filling.

The machine will automatically shut down after 2 minutes of inactivity without being emptied or rinsed.

Emptying with internal rinsing (Machine with level pipe but without drain pump)

Reference value row 34=0.

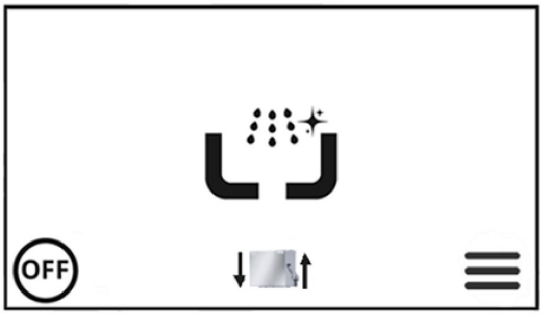

N_A_1

Machines without a drain pump with level pipe in shutdown menu

The hood lift button will only be displayed when the machine is equipped with automatic hood lift.

Only the rinse programme can be selected. This programme is selected by pressing the icon (in the middle of the display).

When the rinse programme is selected, the following will be displayed:

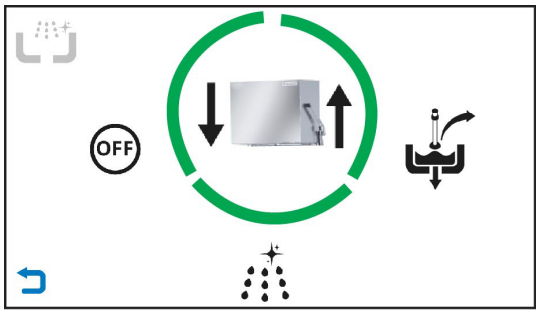

N_A_2

- Removal of level pipe/check on low level
  NB! If the level pipe is not removed and the tank empty within 5 minutes, the machine will be shut down automatically.
- Rinsing, starts automatically when the hood is closed.
  NB! If the hood is not closed when rinsing is due to start, the machine will be shut down automatically after 2 minutes.
- The machine will be shut down automatically when the rinse programme is complete.

The programme will close as soon as the user presses the “Back” button.

Emptying with internal rinsing (Machine with level pipe and drain pump) (option)

Reference value row 34=1.

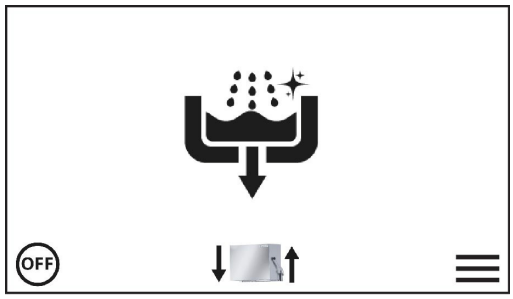

N_A_Dp_1

Machine with drain pump and level pipe in shutdown menu

The hood must be open when the drain pump is running.

The hood lift button will only be displayed when the machine is equipped with automatic hood lift.

Here, a combined emptying programme (time-controlled) with rinsing can be selected. This programme is selected by pressing the icon.

When the programme is selected, the following will be displayed:

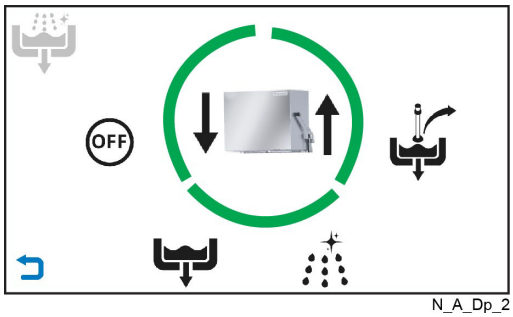

N_A_Dp_2

- Emptying: Removal of level pipe; the icon flashes until the tank is empty. NB! The drain pump remains active until the tank is empty, with an adjustable delay time (reference value row 39). If the level pipe is not removed and the tank empty within 5 minutes, the machine will be shut down automatically.
- Rinse programme with emptying: Starts automatically when the hood is closed.
  NB! If the hood is not closed when rinsing is due to start, the machine will be shut down automatically after 2 minutes.
- Shutdown: The machine is shut down automatically when the rinse programme and additional emptying of the tank have taken place.

The programme will close as soon as the user presses the “Back” button.

Storing removable parts

There are various options for storing the removable parts when the machine has been cleaned. It is important that the level pipe's sleeve is not deformed.

Placing cleaned components in a basket after washing

Navigation menu

When the machine is in shutdown mode and "Navigation" is selected, the following will be displayed:

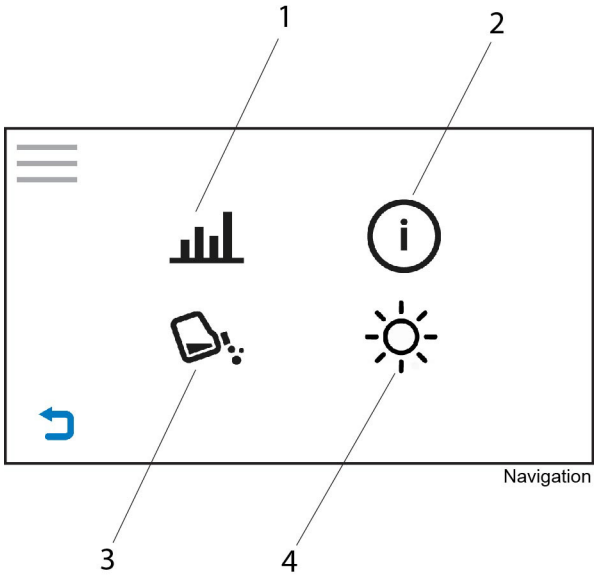

The display shows "Navigation"

1. Statistics
2. Machine information
3. Detergent setting
4. Display settings

Statistics

When statistics is selected, the following will be displayed:

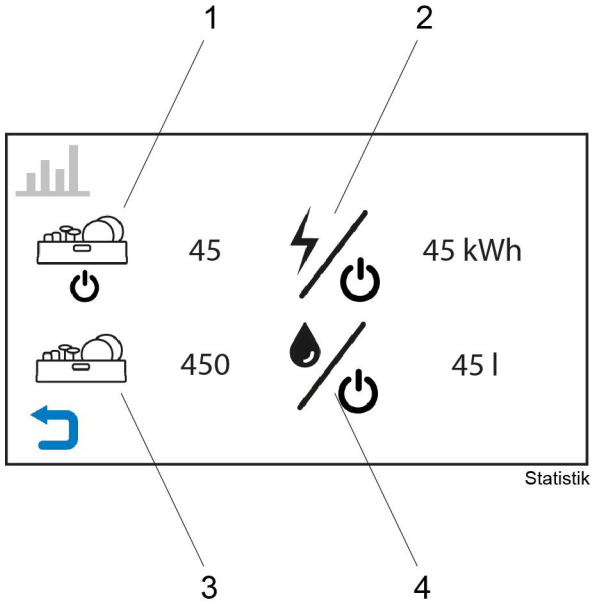

The display shows “Statistics”

1. Number of washes since last start
2. Calculated electricity consumption since last start
3. Total number of washes since installation
4. Calculated and measured (option) water consumption since last start

Machine information

When information is selected, the following will be displayed:

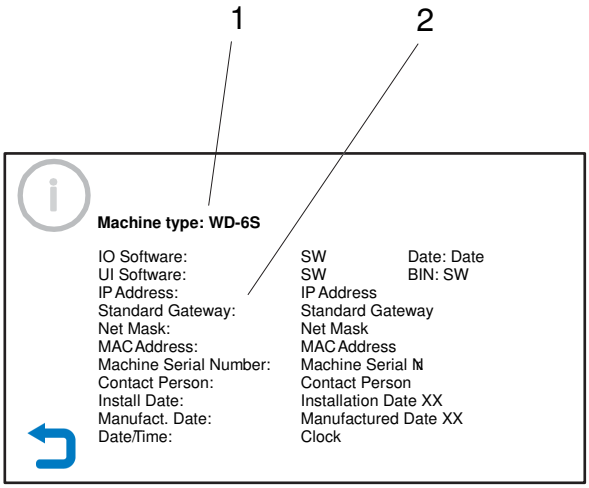

Maskin info

The display shows “Machine information”

1. Name of machine
2. Miscellaneous information about the machine (e.g. software, serial number, installation date, etc.)

Detergent settings

Here, it is possible, without being logged in, to adjust the value of reference value row 22 and to run the detergent output for 5 seconds by pressing (5). The symbol will flash when the detergent output is being run.

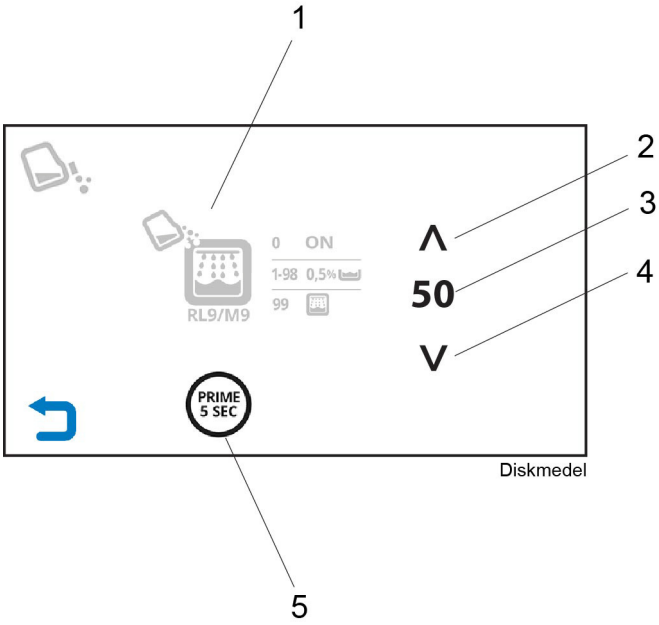

The display shows “Detergent settings”

1. Detergent dosage
2. Increase set value
3. Set value
4. Reduce set value
5. Run the detergent pump for 5 seconds

Display settings

Here, it is possible to adjust the various brightnesses without being logged in.

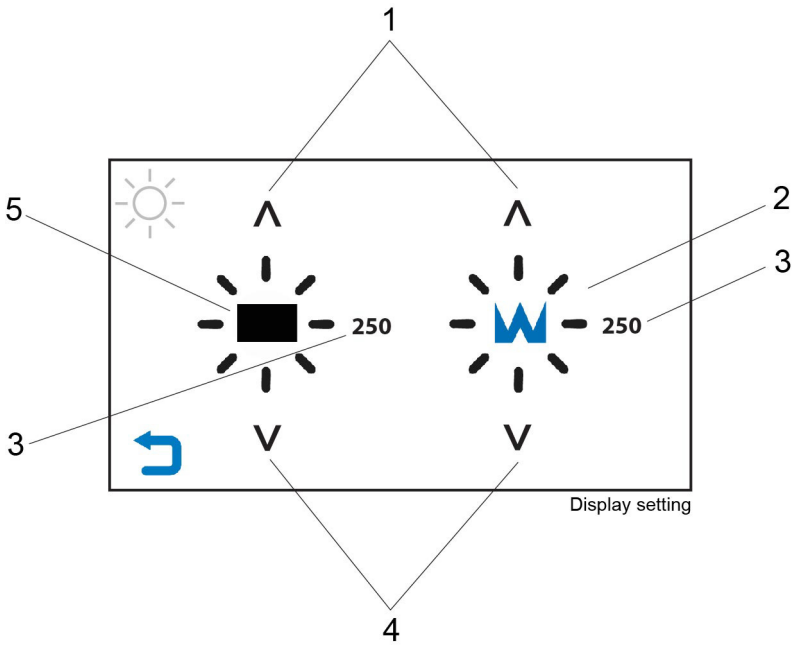

The display shows “Settings for the display”

1. Increase set value
2. Setting the brightness of “W”
3. Set value
4. Reduce set value
5. Setting the display brightness

4.3.3 Daily cleaning

Machines with ECO flow (condensing unit) (option)

The machine's heat recovery unit is rinsed clean automatically when the machine fills and during ordinary use of the machine.

Internally

The interior of the machine will be rinsed when the machine is switched off in accordance with the manual.

Externally

Wipe the outside of the machine with a soft, damp cloth.

- If detergent is used, it must not contain abrasives. Detergents containing abrasives will damage the stainless steel panels.
- The exterior of the machine must not be hosed. Water can enter the machine and damage the display and electrical equipment.

4.3.4 Cleaning each week or as required

Weekly cleaning should be more thorough than daily cleaning. If the information message "IF10" is shown on the panel, weekly cleaning needs to be performed.

In addition to the daily cleaning measures, clean the machine as per these instructions:

- Remove the wash arms (A). Loosen the lock nut (B) in the centre of the washing arm and remove the washing arm. Check and clean the nozzles if necessary. Rinse the wash arms and refit them.
- Clean the top of the splash strip (C). The strip is inside the top of the machine at the back.

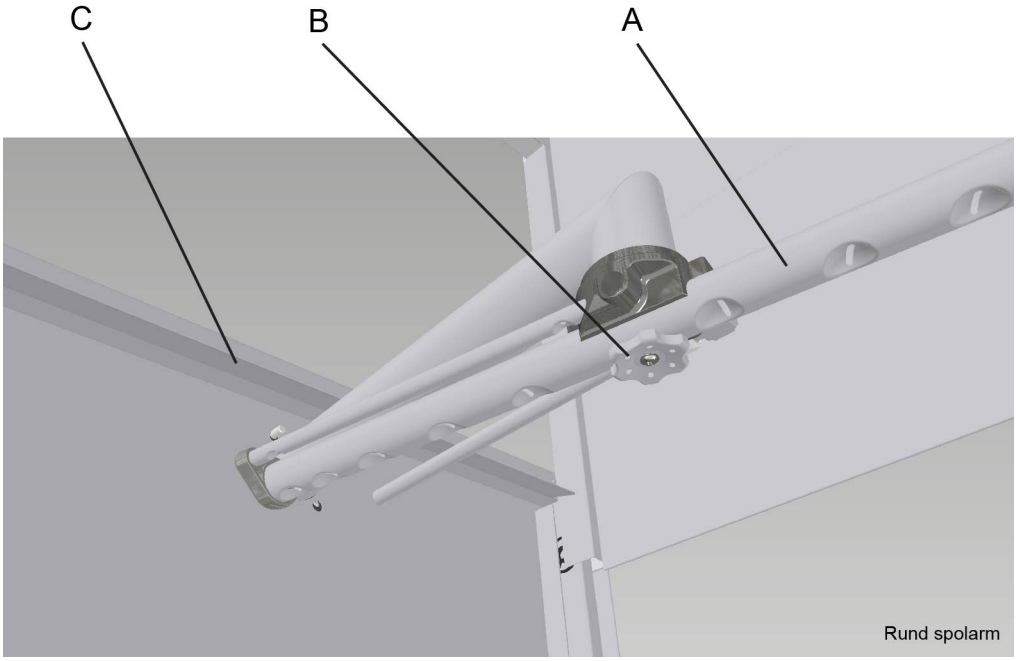

A=Upper wash arm
B=Lock nut
C=Splash strip

4.3.5 Operating problems

Check:

- Has the appliance been used according to the instructions?
- Are all the removable parts in their correct place?
- Is the main switch in the ON position?
- Are there any error messages on the display?
- Are the fuses in the electrical cabinet still intact? Ask service personnel to check the fuses.

Error messages

Alarms are displayed above current symbols on the display.

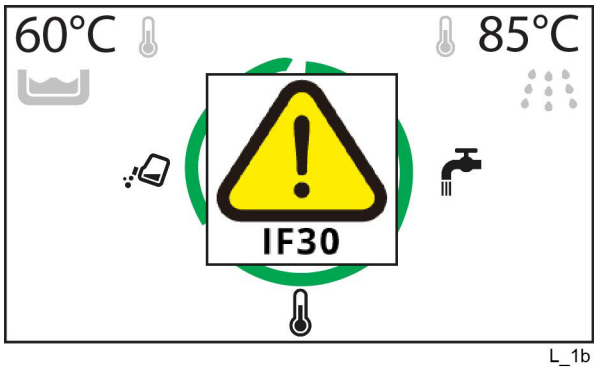

Information alarm

Error alarm

- INFORMATION ALARM: Displayed with a warning symbol together with IF and a number

.
- ERROR ALARM: Displayed with a stop symbol together with ER and a number

.

The ON/OFF button flashes blue in the event of an IF and ER alarm that can be reset.

Some alarms can be acknowledged. This is done by pressing either the ON/OFF button or the alarm symbol on the display.

Some IF alarms that have been remedied by the operator a few times will eventually change to ER alarms, meaning that service personnel must be contacted.

INFO and ER alarm		
Number	Explanation	Action/Remarks
	INFORMATION ALARM: Displayed in combination with IF and a number which indicates the warning alarm that is active.	
	ERROR ALARM: Displayed in combination with a code which indicates the ERROR alarm that is active.	
IF01 / ER01	The time needed to fill the tank has been exceeded.	The alarm is reset by pressing ON/OFF or alternatively by pressing the alarm symbol on the display.
	The level pipe is not in place.	Fit the level pipe.
	The level pipe's rubber sleeve is not sealing against the bottom plate.	Adjust the level pipe. Check that the rubber sleeve has not been damaged. Replace the sleeve, if it is damaged.
	The water stopcock is closed.	Open the stopcock.
ER02	It has taken too long for the machine to heat up, compared with the previous time.	The alarm is reset by pressing ON/OFF or alternatively by pressing the alarm symbol on the display.
IF03 / ER03	The hood's pressure switch has been activated to prevent crushing injuries.	The alarm is reset by pressing ON/OFF or alternatively by pressing the alarm symbol on the display.
ER04	The temperature sensor in the booster heater is faulty.	The alarm will be reset automatically when the correct temperature has been reached; otherwise, contact service personnel.
ER05	The temperature sensor in the washing tank is defective.	The alarm will be reset automatically when the correct temperature has been reached; otherwise, contact service personnel.
IF06 / ER06	The booster heater is not cooled during the final rinse phase.	The alarm is reset by pressing ON/OFF or alternatively by pressing the alarm symbol on the display.
	The water stopcock is closed.	Open the stopcock. Close the hood.

INFO and ER alarm		
Number	Explanation	Action/Remarks
ER08	No temperature change in the booster heater despite the fact that the element is active.	The alarm is reset by pressing ON/OFF or alternatively by pressing the alarm symbol on the display.
IF09	Alarm for changing the water.	Change the water. The alarm is reset by pressing ON/OFF or alternatively by pressing the alarm symbol on the display.
IF10	Alarm for weekly cleaning.	The machine must be cleaned more thoroughly than during daily cleaning. The alarm is reset by pressing ON/OFF or alternatively by pressing the alarm symbol on the display.
ER12	The break tank has not been filled with water within the set time.	The alarm is reset by pressing ON/OFF or alternatively by pressing the alarm symbol on the display.
ER13	The level sensor in the break tank indicates an incorrect signal.	The alarm is reset by pressing ON/OFF or alternatively by pressing the alarm symbol on the display.
ER14	Error on level sensors in the washing tank.	On machines without a level pipe. (Reference value row 34=2) The alarm is reset by pressing ON/OFF or alternatively by pressing the alarm symbol on the display.
ER16	The temperature in the booster heater is too low.	The alarm is reset by pressing ON/OFF or alternatively by pressing the alarm symbol on the display.
IF18	The machine is not emptying as it should.	On machines without a level pipe. (Reference value row 34=2) The alarm is reset by pressing ON/OFF or alternatively by pressing the alarm symbol on the display.
ER23	The hood does not open when the automatic hood opener is used.	On machines with an automatic hood lift function. (Reference value row A2=1 or 2) The alarm is reset by pressing ON/OFF or alternatively by pressing the alarm symbol on the display.
ER27	The machine has lost all its set values.	Service personnel must be contacted!
IF30	Low water level in the washing tank before washing.	Check that the level pipe is closed. The alarm is reset by pressing ON/OFF or alternatively by pressing the alarm symbol on the display.
	The level pipe's rubber sleeve is leaking.	Check that the level pipe's rubber sleeve has not been damaged.
IF34	Detergent alarm.	The alarm is reset by pressing ON/OFF or alternatively by pressing the alarm symbol on the display.
	The machine has run out of detergent.	Check the amount of detergent and refill, if necessary.

INFO and ER alarm		
Number	Explanation	Action/Remarks
IF35	The machine is not filling as it should. Request to open and close the hood to start filling of the tank. The icon will flash.	On machines without a hood lift function. (Reference value row A2=0) The alarm is reset by pressing ON/OFF or alternatively by pressing the alarm symbol on the display.
ER94	Fuse F1 is defective.	The alarm is reset by pressing ON/OFF or alternatively by pressing the alarm symbol on the display.
ER96	The motor safety cut-out for the pumps has tripped.	The alarm is reset by pressing ON/OFF or alternatively by pressing the alarm symbol on the display.
ER97	One digital input is shorted to ground.	Service personnel must be contacted!
ER99	Communication fault between the computer and panel cards.	The alarm is reset by pressing ON/OFF or alternatively by pressing the alarm symbol on the display.
	Incorrect control card (I/O) fitted.	Check the card; replace if defective.
	Incorrect software.	Check which software is loaded on the card. Update the software or replace the card.
	Energy saving mode activated. Displayed when the machine has been inactive for an hour.	The alarm is reset by pressing ON/OFF or alternatively by pressing the alarm symbol on the display.
	Sleep mode activated. Displayed when the machine has been inactive for 8 hours.	The alarm is reset by pressing ON/OFF or alternatively by pressing the alarm symbol on the display.

Troubleshooting

The following errors can be dealt with by the operator. If the problem persists, contact authorised service personnel.

PROBLEM	CAUSE	ACTION
No indication on the display when the control button is pressed.	Power switch is off.	Switch on the power switch.
The machine does not fill with water.	The incoming water stopcock is closed.	Open the tap.
	The hood is open.	Close the hood.
	The level pipe is not in place.	Fit the level pipe.
	The level pipe's rubber sleeve is not sealing against the bottom plate.	Adjust the level pipe. Check that the rubber sleeve has not been damaged. Change the rubber sleeve if it is damaged.
	The final rinse pipe nozzles are blocked.	Clean the wash nozzles.
The machine fills slowly.	The final rinse pipe nozzles are blocked.	Clean the wash nozzles.
The machine does not stop filling.	The level pipe is not in place.	Fit the level pipe.
	The level pipe's rubber sleeve is not sealing against the bottom plate.	Adjust the level pipe. Check that the rubber sleeve has not been damaged. Change the rubber sleeve if it is damaged.
The hood is not opened/closed properly.	Air has got into the system.	Bleed the hood lifting cylinder as per the manual.
The machine does not start washing.	The hood is open.	Close the hood.
	Dishware is blocking the magnet in the door.	Remove the dishware in question.
Noise from the washing pump.	Low water level. Foam in the tank.	Check the level. Change the water.
The machine stops in the middle of the wash cycle and starts taking in water.	The level pipe's rubber sleeve is not sealing against the bottom plate.	Adjust the level pipe. Check that the rubber sleeve has not been damaged. Change the rubber sleeve if it is damaged.

PROBLEM	CAUSE	ACTION
The machine is not cleaning properly.	The rinse and wash nozzles are clogged with dirt.	Check and clean the nozzles.
	There is too little detergent.	Check the amount of detergent. The hose (“thick”) must be submerged in liquid and the filter in the hose must be clean.
	The water in the tank is too dirty.	Change the water.
	Foam forming in the tank.	Check that the washing temperature is not too low and that the correct detergent is being used.
	Programme with too short a wash time selected.	Choose a wash programme with a longer wash cycle.
	Dirt has dried on the dishware to be washed.	Soak the dishware before washing.
	The dishware is incorrectly positioned in the baskets.	Use the correct type of washing basket and accessories to ensure that the dishware is correctly positioned.
	Detergent and drying agent of another make than usual are used.	Use the same make and type as before. Rinse the hoses and pumps with water if necessary.
The dishware has tipped over in the baskets.	The dishware is incorrectly positioned in the baskets.	Put the dishware in the correct position.
	Light dishware need washing.	Use a net grid to hold the items.
Dishware does not dry.	The rinse nozzles are blocked.	Check and clean the nozzles.
	Too little rinsing agent.	Check the amount of rinsing agent. The hose (“thin”) must be submerged in liquid and the filter in the hose must be clean.
	The washed items have been left in the machine.	Remove the washed items once the programme has ended.

When you contact service personnel, you will need to provide the following information:

- Machine type and model.
- Machine serial number and date when the machine was installed.
- A brief description of the problem. Are any fault codes shown in the display?
- What happened/was being done immediately before the fault occurred?

5. Technical specifications

The manufacturer reserves the right to make changes to the technical data.

TECHNICAL DATA	WD-6S	WD-7S	WD-8S
Washing pump (kW)	0.9	1.1	1.5
Booster heater (kW)	9 / 12 *	9 / 12 *	9 / 12 *
Tank heater (kW)	1.8	1.8	1.8
Booster pump (kW)	0.6	0.6	0.6
Drain pump (kW) *	0.04	0.04	0.04
Heat recovery fan (kW) *	0.12	0.12	0.12
Heat recovery fan, flow (m^3/hour) *	250	250	250
Heat recovery, cooling surface (m^2) *	12	12	12
Drain pump for heat recovery (kW) *	0.17	0.17	---
Tank volume (l)	50	50	50
Weight, machine in operation (kg)	160 / 185 *	170 / 195 *	180 / 220 *
Maximum temperature of the surroundings for machines in operation (℃)	35	35	35
Enclosure protection class (IP)	45	45	45

* option

CAPACITY AND OPERATING DATA	WD-6S	WD-7S	WD-8S
Total washing time P1 (min.) *,	1.3	1.3	1.3
Total washing time P2 (min.) *, **	1.8 / 1.3 **	1.8 / 1.3 **	1.8
Total washing time P3 (min.) *, **	3.3 / 2.3 **	3.3 / 2.3 **	3.3
Max. capacity, baskets/hour (no.)	50 / 36 **	50 / 36 **	50 / 36 **
Water consumption rinsing/programme (l) ***	2.5–4	2.5–4	2.5–4
Sound pressure level, LPA (dBA) ****	60	62 / 60	62 / 60
Sound power level LWA (dBA) ****	74 / 72	74 / 72	74 / 72

* Factory setting. The wash time is adjustable.

** option

*** Applies under ideal conditions. The water consumption depends on local conditions. Fine adjustments can be made during installation.

**** in accordance with EN 60 335-2-58, §ZAA.2.8 with instruments that satisfy class 1.
Measurements of the sound pressure level on site are performed in three places 20 cm from the edges of the front at a height of 1.55 m using a microphone.
When measuring sound power level, create an imaginary measurement area consisting of five sides at a distance of 1 m from all edges of the machine.

CONNECTION, MACHINE	WD-6S	WD-7S	WD-8S
Total connected load (kW)	9.9 / 12.9 **	10.1 / 13.1 **	10.3 / 13.5 **
Main fuse (A) * (400-415V 3N~ 50/60Hz) (400-415V 3~ 50Hz) (440V 3~ 60Hz)	16 / 25 **	16 / 25 **	16 / 25 **
Main fuse (A) * (400V 3~ 50/60Hz)	20 / 25 **	20 / 25 **	20 / 25 **
Main fuse (A) * (200V 3~50/60Hz) (440V 3~ 60Hz) (480V 3~ 60Hz)	20	20	
Main fuse (A) * (230V 3~ 50/60Hz)	25	25	
Main fuse (A) * (230V 3~ 50Hz)	35	35	
Main fuse (A) * (200V 3~ 50/60Hz) (230V 1N~ 50Hz)	32	32	
Main fuse (A) * (200V 3~ 50/60Hz)	50	50	
Main fuse (A) * (208-240V 3~ 60Hz)	25-28 / 32-37 **	25-28 / 32-37 **	
Main fuse (A) * (460V 3~ 60Hz)	16 / 20 **		
Main fuse (A) * (230V 3~ 50Hz)			32 / 40 **
Max. connectable conductor cross-sectional area Cu (mm²) *** (400-415V 3N~ 50/60Hz) (L1-L3, N, PE) (400-415V 3~ 50Hz) (L1-L3, PE) (440V 3~ 60Hz) (L1-L3, PE) (460V 3~ 60Hz) (L1-L3, PE) (480V 3~ 60Hz) (L1-L3, PE) (230V 1N~ 50Hz) (L1, N, PE)	2.5	2.5	2.5
Max. connectable conductor cross-sectional area Cu (mm²) *** (230V 3~ 50Hz) (L1-L3, PE) (200V 3~ 50/60Hz) (L1-L3, PE) (208-240V 3~ 60Hz) (L1-L3, PE)	6.0	6.0	6.0
Max. connectable conductor cross-sectional area Cu (mm²) *** (400-415V 3N~ 50Hz) (L1-L3, N, PE) (230V 3~ 50/60Hz) (L1-L3, PE)	4.0	4.0	
Maximum short-circuit current Icu (kA)	1.5	1.5	1.5

* Other voltages on request

** Option

*** 2-metre-long cable included

Always check the information in the above table against the machine's wiring diagram.

WATER, DRAIN AND VENTILATION CONNECTIONS	WD-6S	WD-7S	WD-8S
Water quality, hardness (°dH)	2–7	2–7	2–7
Water connection 5-65°C (exterior thread) **	R½"	R½"	R½"
Waste pipe connection, PP pipe (ø mm)	50	50	50
Water capacity, pressure (kPa) ***	180	180	180
Water capacity, flow (litres/min.)	18	18	18
Water capacity, hood lift, pressure (kPa) *	300	300	300
Floor drain, capacity (litres/sec.)	3	3	3
Heat load to room, latent / sensible / total (kW)	0.6 / 1.7 / 2.3 0.3 / 0.9 / 1.2 *	0.6 / 1.7 / 2.3 0.3 / 0.9 / 1.2 *	0.6 / 1.7 / 2.3 0.3 / 0.9 / 1.2 *

* option

** With water colder than 55°C, we recommend a 12kW booster heater

SIZE AND WEIGHT FOR TRANSPORT	WD-6S	WD-7S	WD-8S
Size, LxWxH (mm) **	765 x 710 x 1560	765 x 805 x 1650	765 x 880 x 1650
Weight (kg) **	115 / 140 *	125 / 150 *	135 / 175 *

** Including packaging